# Operating and Maintaining the P20 Console

PRECOR®

# Operating and Maintaining the P20 Console

PRECOR®

# Edition Information

OPERATING AND MAINTAINING THE P20 CONSOLE

P/N 300753-201 rev B

Copyright © June 2011 Precor Incorporated. All rights reserved. Specifications subject to change without notice.

## Trademark Note

Precor, AMT, and EFX are registered trademarks and Preva is a trademark of Precor Incorporated. Other names in this document may be the trademarks or registered trademarks of their respective owners.

## Intellectual Property Notice

All rights, title, and interests in and to the software of the Preva Business Suite, the accompanying printed materials, any copies of such software, and all data collected via the Preva Business Suite, are exclusively owned by Precor or its suppliers, as the case may be.

Precor is widely recognized for its innovative, award-winning designs of exercise equipment. Precor aggressively seeks U.S. and foreign patents for both the mechanical construction and the visual aspects of its product design. Any party contemplating the use of Precor product designs is hereby forewarned that Precor considers the unauthorized appropriation of its proprietary rights to be a very serious matter. Precor will vigorously pursue all unauthorized appropriation of its proprietary rights.

Precor Incorporated
20031 142nd Ave NE, P.O. Box 7202
Woodinville, WA 98072-4002
1-800-347-4404

**http://www.precor.com**

# Important Safety Instructions

This apparatus (hereinafter referred to as the console) is intended to be shipped with new Precor exercise equipment (hereinafter referred to as the base unit). It is not packaged for individual sale.

**WARNING** **To prevent injury, the console must be attached securely to the base unit following all assembly and installation instructions shipped with the base unit. The console is intended to be connected to AC mains power through the furnished power supply ONLY. It should be powered on only when installed as described in the assembly and installation instructions shipped with the base unit. The console is intended for use only with Precor fitness equipment, not as a standalone device.**

## Safety Precautions

Read all instructions in the documentation provided with your exercise equipment before installation of this device including all assembly guides, user guides, and owner's manuals.

Always follow basic safety precautions when using this equipment to reduce the chance of injury, fire, or damage. Other sections in this manual provide more details of safety features. Be sure to read these sections and observe all safety notices. These precautions include the following:

- Read all instructions in this guide before installing and using the equipment and follow any labels on the equipment.
- Make sure all users see a physician for a complete physical examination before they begin any fitness program.

- *Il est conseillé de subir un examen médical complet avant d'entreprendre tout programme d'exercise. Si vous avez des étourdissements ou des faiblesses, arrêtez les exercices immédiatement.*
- Do not allow children, or people unfamiliar with the operation of this equipment, on or near it. Do not leave children unsupervised around the equipment.
- Make sure all users wear proper exercise clothing and shoes for their workouts and avoid loose or dangling clothing. Users should not wear shoes with heels or leather soles, and they should check the soles of their shoes to remove any dirt and embedded stones. They should also tie long hair back.
- Never leave the equipment unattended when it is plugged in. Unplug the equipment from its power source when it is not in use, before cleaning it, and before providing authorized service.

  **Note:** The optional power adapter is considered a power source for self-powered equipment.
- Use the power adapter provided with the equipment. Plug the power adapter into an appropriate, grounded power outlet as marked on the equipment.
- Care should be taken when mounting or dismounting the equipment.
- Read, understand, and test the emergency stop procedures before use.
- Keep the power cord or optional power adapter and plug away from heated surfaces.
- Route power cables so that they are not walked on, pinched, or damaged by items placed upon or against them, including the equipment itself.
- Ensure the equipment has adequate ventilation. Do not place anything on top of or over the equipment. Do not use on a cushioned surface that could block the ventilation opening.
- Assemble and operate the equipment on a solid, level surface.

- Proper Location for Equipment
    - For all equipment other than treadmills: Locate at least 40 inches (1 meter) away from walls or furniture on either side of the equipment, and 40 inches (1 meter) away from objects behind the equipment.
    - For treadmills: Locate at least 40 inches (1 meter) away from walls or furniture on either side of the treadmill, and at least 80 inches (2 meters) away from objects behind the treadmill.

  ***Important:*** *These location standards should also be used when positioning equipment away from sources of heat, such as radiators, heat registers, and stoves. Avoid temperature extremes.*
- Keep equipment away from water and moisture. Avoid dropping anything on or spilling anything inside the equipment to prevent electric shock or damage to the electronics.
- When using the treadmill, always attach the safety clip to your clothing before beginning your workout. Failure to use the safety clip may pose a greater risk of injury in the event of a fall.
- Do not operate electrically powered equipment in damp or wet locations.
- Never operate this equipment if it has a damaged cord or plug, if it is not working properly, or if it has been dropped, damaged, or exposed to water. Call for service immediately if any of these conditions exist.
- Maintain the equipment to keep it in good working condition, as described in the *Maintenance* section of the assembly and maintenance guide. Inspect the equipment for incorrect, worn, or loose components, and then correct, replace or tighten prior to use.
- If you plan to move the equipment, obtain help and use proper lifting techniques.
- Equipment Weight Restrictions: Do not use the treadmill if you weigh more than 500 pounds (225 kg). If you weigh more than 350 pounds (160 kg), do not run on the treadmill. For all other fitness equipment, the weight limit is 350 pounds (160 kg).

- Use the equipment only for its intended purpose as described in this manual. Do not use accessory attachments that are not recommended by Precor. Such attachments may cause injuries.
- Do not operate the equipment where aerosol (spray) products are being used or where oxygen is being administered.
- Do not use outdoors.
- Do not attempt to service the equipment yourself, except to follow the maintenance instructions in this manual.
- Never drop or insert objects into any opening. Keep hands away from moving parts.
- Do not set anything on the stationary handrails, handlebars, control console, or covers. Place liquids, magazines, and books in the appropriate receptacles.
- Do not lean on or pull on the console at any time.

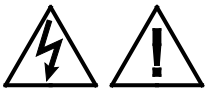

**CAUTION: DO NOT remove the cover, or you may risk injury due to electric shock. Read the assembly and maintenance guide before operating. There are no user-serviceable parts inside. Contact Customer Support if the equipment needs servicing. For use with single phase AC power only.**

## Hazardous Materials and Proper Disposal

The batteries within self-powered equipment contain materials that are considered hazardous to the environment. Federal law requires proper disposal of these batteries.

If you plan to dispose of your equipment, contact Precor Commercial Products Customer Support for information regarding battery removal. Refer to *Obtaining Service*.

## Product Recycling and Disposal

This equipment must be recycled or discarded according to applicable local and national regulations.

Product labels, in accordance with European Directive 2002/96/EC concerning waste electrical and electronic equipment (WEEE), determine the framework for the return and recycling of used equipment as applicable throughout the European Union. The WEEE label indicates that the product is not to be thrown away, but rather reclaimed upon end of life per this Directive.

In accordance with the European WEEE Directive, electrical and electronic equipment (EEE) is to be collected separately and to be reused, recycled, or recovered at end of life. Users of EEE with the WEEE label per Annex IV of the WEEE Directive must not dispose of end of life EEE as unsorted municipal waste, but use the collection framework available to customers for the return, recycling, and recovery of WEEE. Customer participation is important to minimize any potential effects of EEE on the environment and human health due to the potential presence of hazardous substances in EEE. For proper collection and treatment, refer to *Obtaining Service*.

# Regulatory Notices for Cardiovascular Exercise Equipment

The regulatory information in this section applies to the exercise equipment and its control console.

## Safety Approvals for Cardiovascular Equipment

Precor equipment has been tested and found to comply with the following applicable safety standards.

### Cardiovascular Type Equipment:

- CAN/CSA, IEC, EN 60335-1 (Household and similar electrical appliances - Safety)
- EN 957 (Stationary training equipment, class S/B compliant equipment)

## Radio Frequency Interference (RFI)

This Precor exercise equipment conforms to the following national standards defining acceptable limits for radio frequency interference (RFI).

### Federal Communications Commission, Part 15

This equipment has been tested and found to comply with the limits for a Class A digital device, pursuant to Part 15 of the FCC Rules. These limits are designed to provide reasonable protection against harmful interference in a commercial installation. The equipment generates, uses, and can radiate radio frequency energy and, if not installed and used in accordance with the owner's manual instructions, can cause harmful interference to radio communications.

Operation is subject to the following two conditions: (1) this device may not cause harmful interference, and (2) this device must accept any interference received, including interference that may cause undesired operation.

**WARNING** **Per FCC rules, changes or modifications not expressly approved by the manufacturer could void the user's authority to operate the equipment.**

## Industry Canada

This device complies with RSS-210:2007 of the Spectrum Management & Telecommunications Radio Standards Specification. Operation is subject to the following two conditions: (1) this device may not cause harmful interference, and (2) this device must accept any interference received, including interference that may cause undesired operation.

This Class A digital apparatus complies with Canadian ICES-003.

*Cet appareil numérique de la classe A est conforme à la norme NMB-003 du Canada.*

**ATTENTION: Haute Tension**
**Débranchez avant de réparer**

## European Applications

CE compliance is claimed to the following directives:

- 2004/108/EC EMC Directive
- 2006/95/EC LVD Directive
- 2002/95/EC RoHS Directive

Directive compliance has been verified to the following standards:

- EN 55022
- EN 55024
- EN 60335-1
- EN 60065 (P80 and PVS)

# Electrical Recommendations: 120 V and 240 V Treadmills

**Note:** This is a recommendation only. NEC (National Electric Code) guidelines or local region electric codes must be followed.

You should have received a power cable that meets your local electrical code requirements along with the equipment. Precor treadmills must be connected to a 20 amp individual branch circuit that can be shared only with one PVS. If you need additional help with the power connections contact your Precor authorized dealer.

***Important:*** *An individual branch circuit provides a hot conductor and neutral conductor to a receptacle. The conductors must not be looped, "daisy-chained", or connected to any other conductors. The circuit must be grounded according to NEC guidelines or local region electric codes.*

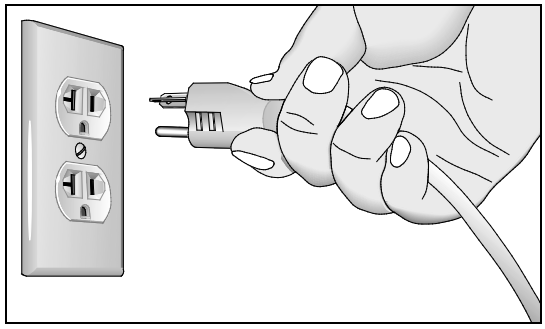

**Figure 1: North American 120-volt, 20-amp power receptacle**

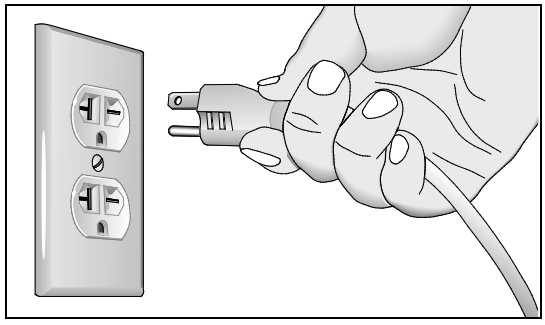

**Figure 2: North American 240-volt, 20-amp power receptacle**

# Electrical Recommendations: All Equipment Excluding Treadmills

**Note:** This is a recommendation only. NEC (National Electric Code) guidelines or local region electric codes must be followed.

For equipment fitted with a P80 console or Personal Viewing System (PVS) screen a separate power connection is required. For a 20 amp branch circuit up to 10 screens can be connected. If the branch circuit has any other devices plugged into the circuit the number of screens must be reduced by the wattage of the other devices.

**Note:** The typical splitter power cords that have IEC-320 C13 and C14 plugs have a recommended maximum capacity of five screens.

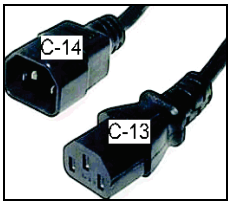


**Figure 3: IEC-320 C13 and C14 plugs**

# Obtaining Service

Do not attempt to service the equipment except for maintenance tasks. If any items are missing, contact your dealer. For more information regarding customer support numbers or a list of Precor authorized service centers, visit the Precor web site at *http://www.precor.com.*

For the most current manuals, go to *http://www.precor.com*.

# Table of Contents

**Important Safety Instructions ..... 3**
Safety Precautions ..... 3
Hazardous Materials and Proper Disposal ..... 6
Product Recycling and Disposal ..... 6
Regulatory Notices for Cardiovascular Exercise Equipment ..... 7
Electrical Recommendations: 120 V and 240 V Treadmills ..... 9
Electrical Recommendations: All Equipment Excluding Treadmills ..... 10
Obtaining Service ..... 10

**Getting Started ..... 13**
Activating the Console for Self-Powered Equipment ..... 13

**Setting Up the Console ..... 15**
Viewing the Odometer Informational Menu ..... 18
Viewing the Club Settings Menu ..... 21

**Introducing Users to the P20 Console ..... 27**
Using the Touch Heart Rate Feature ..... 27
Using a Chest Strap Transmitter ..... 29
Using the Treadmill Safety Clip ..... 29
Treadmill Auto Stop™ (Automatic Stop) Function ..... 31
Using SmartRate® ..... 32

**Starting a Workout ..... 33**
Starting a Preset Programmed Workout ..... 33
Pausing and Restarting an Exercise Session ..... 35
Ending a Session ..... 36

**Programs ..... 39**

**Maintenance ..... 43**
Cleaning the Console and Display ..... 43

Chapter 1

# Getting Started

The P20 console offers administrators and members the ability to set defaults that meet their specific needs.

## Activating the Console for Self-Powered Equipment

Precor equipment is either self-powered or externally powered using an optional power adapter. Self-powered equipment requires the user exercise to initialize the console. This section provides more detail about powering equipment.

### Activating the Console for Self-Powered Equipment

On self-powered equipment, when a user starts exercising, the console initializes and displays the Welcome banner. A minimum rate of motion must be maintained for the Welcome banner to appear. The words PEDAL FASTER (or the equivalent message depending on the equipment type) appear in the display when the rate of motion drops below the minimum requirements.

The equipment saves its battery charge by moving into a shutdown mode. If the user does not maintain the minimum rate of motion, a 30-second shutdown process begins.

In this mode, the console displays a countdown indicator and ignores all keypresses. If no movement is detected or the rate of motion remains below the minimum, the indicator changes as the countdown continues.

**Note:** The user can resume exercising before the countdown period elapses and the program will continue from the point at which it was paused.

## Optional Use of the Power Adapter

An optional AC power adapter provides sustained power to the equipment. This adapter allows you to change settings without having to pedal the equipment. To purchase the power adapter, contact your dealer.

If you purchase the optional power adapter, you must also purchase the internal cable kit. The kit supplies the cable, bracket, and fasteners that connect the power adapter to the lower electronics board.

**CAUTION: The internal cable kit must be installed by authorized service personnel. Do not attempt installation on your own as you could void the Precor Limited Warranty. For more information, refer to *Obtaining Service*.**

***Important*:** *If this equipment includes a P80 console, the optional power adapter and the internal cable kit must still be installed to provide continuous power to the base unit and support its internal battery.*

Once the internal cable kit is installed, you can plug the optional power adapter into the equipment. Plug the opposite end into the appropriate power source for your equipment (120 V or 240 V). Review the safety instructions found at the beginning of this manual before using the power adapter.

**CAUTION: When the optional power adapter is in use, make sure that the power supply cord does not create a safety hazard. Keep it out of the way of traffic and moving parts. If the power supply cord or power conversion module is damaged, it must be replaced.**

The control console functions differently when the power adapter is connected. Because the power adapter provides a constant source of power, a user can pause for brief periods without initiating shutdown procedures. When the pause time limit expires and the user has not resumed exercising, the console returns to the Welcome screen. The default pause time is 30 seconds for all fitness equipment. Refer to the manual for your control console for instructions on setting or changing the pause time limit.

Chapter 2

# Setting Up the Console

Use the System mode to configure settings in ways that benefit your users and your facility. The System menu is visible only to administrators and registered service technicians. Changes made to these settings are saved to the fitness equipment.

The system settings are:

- Odometer Settings
- Club Settings

## Identifying Parts of the Console

The following diagram provides information about the console keys. The number and actions of the console keys may differ slightly depending on the type of equipment.

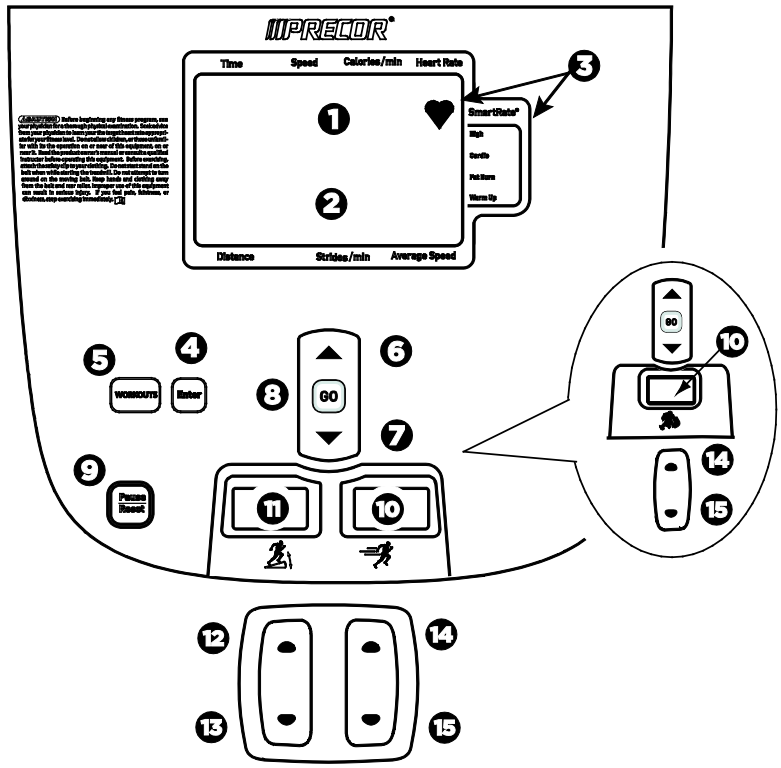


**Figure 4: P20 Console Display**

**Note:** Some equipment has both an intensity (resistance) indicator and an incline indicator. Other equipment may only have one type of indicator.

**Table 1. Parts of the P20 console display**

| Number | Part Name | Details |
|---|---|---|
| 1 | Upper text display | Scrolls information to guide the user |
| 2 | Lower text display | Displays graphical information about your workout progress |
| 3 | SmartRate® and Heart Rate icon | SmartRate® displays a range of heart rate intensity to the user. The heart-shaped icon pulses in sync with the detected heartbeat. |

| Number | Part Name | Details |
|---|---|---|
| 4 | Enter key | |
| 5 | Workout key | Displays preset workouts |
| 6 | Input Up key | Use to navigate user menus |
| 7 | Input Down key | Use to navigate user menus |
| 8 | GO key | Use to begin your workout |
| 9 | Reset key | (**Pause/Reset** on tread consoles) |
| 10 | Intensity indicator | Displays level of resistance. This window can appear on single and dual indicator equipment. |
| 11 | Incline indicator | Displays level of incline<br>Treadmill, EFX |
| 12 | Incline Up | Increases incline level<br>Treadmill, EFX |
| 13 | Incline Down | Decreases incline level<br>Treadmill, EFX |
| 14 | Intensity Up key | Increases resistance or speed. This key appears on single indicator equipment. |
| 15 | Intensity Down key | Decreases resistance or speed. This key appears on single indicator equipment. |

## Welcome State

The equipment is in the Welcome state when it is on, but not actually in use. This means that there is no exercise session, data entry, or diagnostic operation in progress.

When the equipment is in the Welcome state:

- **WELCOME** scrolls on the program display. This is referred to as the Welcome banner.
- **PRESS GO OR PROGRAMS TO START** scrolls in the text display.
- The heart rate signal is the only segment activated.
- On the treadmill, the belt is not moving and the lift motor is off.

On self-powered equipment, the battery initializes when you begin working out. You must maintain a minimum rate of motion for the Welcome banner to appear. **PEDAL FASTER** (or the equivalent message depending on the equipment type) appears in the display when the battery is low or when the rate of motion drops below the minimum requirements.

# Viewing the Odometer Informational Menu

Each piece of equipment provides information about its use, as well as its software version, serial number, usage log, and event log. In most cases, you will only access this information if directed to do so by Precor® Customer Support.

**To view the odometer informational menu:**

1. Press the following keys in the order presented.

   **Reset** (**Pause/Reset** on tread consoles)

   **Input Up**

   **Enter**

   **Note:** Only two seconds are allowed between keypresses. If a key is not pressed, the console display returns to the Welcome banner.
2. Press **Up** or **Down** to navigate the menu.
3. Press **GO** to select a test.
4. Press **Programs** once to return to the Odometer menu or twice to return to the Welcome banner.

## Odometer

The odometer tracks equipment usage by the number of units traveled. The Odometer Units and Values table provides information on how usage is tracked depending on the equipment type.

The odometer information updates under these conditions:

- Every 30 minutes
- At the end of a course
- When an event occurs

If the course is terminated by turning off the power, then the odometer data for that workout is lost.

## Event Log

The software is able to detect a variety of events. The event log holds a maximum of 30 events. After the log reaches 30 events, older events are erased to make room for newer ones.

**Note:** There is a shortcut for quick access to the Event Log report. From the Welcome banner, press **Reset** (**Pause/Reset** on tread consoles) for five seconds. If there are no events, the words **STUCK KEY** appear and then the console returns to the Welcome banner.

Each event log entry contains the following information:

- Event number
- Odometer value when the event occurred
- Hour meter value at the time the event occurred
- Current drawn by the motor when the event occurred (treadmill only)

The following table contains a list of events detectable by the software.

**Table 2. Event log numbers and descriptions**

| Event Number | Description of Event |
|---|---|
| 00 | Upper PCA memory location event |
| 02 | RAM location event |
| 03 | EEPROM checksum event |
| 05 | Depressed key at power up |
| 09 | Lower PCA memory test event |
| 10 | Line Frequency out of acceptable range |
| 11 | Watchdog (Upper PCA) low voltage power |
| 12 | Watchdog (Lower PCA) low voltage power |
| 13 | Fan at incorrect speed (version 1 treadmills) |
| 14 | Fan fail (Lower PCA) |
| 15 | AC input voltage too high |
| 16 | AC input voltage too low |
| 20 | Too many maximum power requests in one second |
| 21 | Too many maximum consecutive power requests |

| Event Number | Description of Event |
|---|---|
| 22 | No motor pulses at start up |
| 23 | Motor pulses missing after start up |
| 24 | Reduce speed requested, speed is not reducing |
| 26 | Motor pulse width incorrect |
| 27 | Too much drive motor current |
| 28 | Temperature too high |
| 29 | Excessive AC input current |
| 30 | Communications event lower board to upper board |
| 31 | Incorrect Communications event upper board to lower board |
| 32 | Communication event upper board to lower board |
| 33 | Incorrect communications event lower board to upper board |
| 40 | Lift motion detected |
| 42 | Lift position value out of range |
| 43 | Zero switch not found |
| 44 | Un-commanded lift motion |
| 45 | Lift going in the wrong direction |
| 50 | Too much brake (magnet) current |
| 53 | Cannot read target, cannot find home switch |
| 54 | Target pulses lost during operation |
| 55 | Brake home switch activated unexpectedly |
| 60 | Auto Stop sensor failure (treadmill) |
| 61 | Auto Stop not present (treadmill) |

## Hour Meter

Tracks the number of hours that a piece of equipment has run. The equipment also tracks elapsed minutes, but the value that displays is rounded up the nearest full hour.

### Lower Software

Displays the software version (part number) of the motor drive unit.

### U-Base Software

Displays the software version and part number of the upper unit application software.

### U-Boot Software

Displays the software version and part number of the upper boot loader software.

### Usage Log

Displays information about program usage including:

- Programs that have been used
- Number of times each program has been used
- Length of time each program was used

**To view the usage log:**

1. From the Odometer Information menu, press **Enter**.
2. Press **Input Up** or **Input Down** to navigate the list.
3. Press **Programs** once to return to the menu or twice to return to the Welcome banner.

## Viewing the Club Settings Menu

Use Club settings to customize the equipment for your club or facility and to view useful product information. These features remain hidden from club patrons and can only be accessed using special keypresses.

The equipment must be in the Welcome state before you can access the Club Settings menu. To access the Welcome state, you must power the equipment. For self-powered equipment, use the optional power adapter, otherwise you will have to maintain the minimum rate of motion. For more information on self-powered equipment, refer to *Activating the Display*.

The changes made in the Club Settings mode become the default settings when the display resets to the Welcome state.

**To view the Club Settings menu:**

1. Press the following keys in the order presented.
   **Reset** (**Pause/Reset** on tread consoles)
   **Enter**
   **Input Up**
   **Enter**
   **Programs**
   **Enter**
   **Input Up**
   **Enter**
   **Note:** Only two seconds are allowed between keypresses. If a key is not pressed, the console display returns to the Welcome banner.
2. Press **Up** or **Down** to navigate the menu.
3. Press **GO** to select a test.
4. Press **Programs** once to return to the Odometer menu or twice to return to the Welcome banner.

## Club Setting Values

### Language

Select the preferred language for the console display.

### Max Cool Down Time

Select the maximum amount of time the equipment will remain in the cool down mode. The available values are 0 to 5 minutes. Cool down time is the period of time following the completion of a program when the user exercises at a reduced work rate.

### Max Pause Time

This setting limits how long a equipment will remain in the paused state during a workout before resetting. The available values are 1 to 120 seconds.

### Set Max CrossRamp

Select the maximum height on the EFX CrossRamp. The default is 20, which is also the maximum height.

### Max Resistance (Bike, AMT)

Select the maximum resistance that a user can program while using the equipment.

### Max Workout Time

Set a maximum workout time per session. Choose a time limit between 1 and 90 minutes, or select **No Limit** if you do not want to set a workout time limit.

### Default Workout Time

When set to **ON**, the default workout time will be 30 minutes. When set to **OFF**, program times will be the value in the max workout time setting.

### Unit of Measure

Select U.S. standard or metric displays.

### Max Speed (Treadmill)

Set the maximum speed that a user can program while using the equipment.

### Max Incline (Treadmill)

Set the maximum percent incline that a user can program while using the equipment.

### Resistance Range (Bike)

Workout intensity can be set to the following levels:

- Low (rehab)
- Medium (low torque)
- High (high torque)

## Safety Code (Treadmill)

The Safety Code feature prevents use of the treadmill until a password is entered. Select **Enable** to use this feature and press the following keys in the order presented.

**Programs**

**Enter**

**Input Down**

**Input Up**

When the safety code is enabled, the display will be in the Welcome state until a key is pressed. If a key is pressed, the word **PASSWORD?** appears in the display. If a password is not entered within two minutes, the equipment resets to the Welcome banner.

**Table 3. Equipment values and their associated ranges**

| Equipment | Value | Default Value | Value Range | Value Change Increments |
|---|---|---|---|---|
| All | Workout program | Manual | | |
| All | Weight (lb) | 150 pounds | 50 - 350 pounds | 1 pound |
| All | Weight (kg) | 68 kilograms | 23 - 160 kilograms | 1 kilogram |
| All | Age | 35 years old | 15 - 99 years | 1 year |
| All | Workout time | 30 minutes | 1 - 90 minutes | 1 minute (data entry) / 1 second (measurement) |
| All | Maximum pause time | 120 seconds (treadmill)<br><br>30 seconds (EFX, bike, AMT) | 1 - 120 seconds | |
| All | Target heart rate | 130 | | |

| Equipment | Value | Default Value | Value Range | Value Change Increments |
|---|---|---|---|---|
| All | Unit of measurement | U.S. | | |
| All | Model number | Dependent on product | | |
| All | Time meter | 0 hours | | |
| All | Event log | 0 entries | | |
| All | Odometer | 0 units | | |
| All | Cool down | 5 minutes | 1 - 5 minutes | 1 minute |
| All | Data entry inactivity time out | 30 seconds | | |
| All | Time count up | 00:00 minutes | | |
| All | Time count down | 30:00 minutes | | |
| All | Course segments | | Entered time/20 if less than 20 minute workout.<br><br>If over 20 minute workout, segment = 1 minute | |
| Bike, AMT | Resistance level | 1 | 1 - 20 (AMT)<br>1 - 25 (bike) | 1 |
| Bike | Resistance range | High | Low<br>Medium<br>High | |
| Treadmill | Speed | 1 mph<br>1.6 kph | .5 - 12 mph<br>.8 - 19.3 kph | 0.1 mph<br>.1 kph |

| Equipment | Value | Default Value | Value Range | Value Change Increments |
|---|---|---|---|---|
| Treadmill | Quick Start course segment | 1 minute | | |
| Treadmill | Max incline | 15 percent incline | 0 - 15 percent | 0.5 percent |
| Treadmill | Mid-session change timeout | 5 seconds | | None |
| Climber | Steps per minute | | 30 - 80 | 5 |
| EFX | Max CrossRamp | 20 | 1 - 20 | 1 |

Chapter 3

# Introducing Users to the P20 Console

**CAUTION: Before beginning any fitness program, see your physician for a thorough physical examination. Seek advice from your physician to learn the target heart rate appropriate for your fitness level.**

The P20 console offers an easy-to-follow display and multiple programs to help people meet their exercise needs. The sensitive keypad lets them select data and control their workout session and SmartRate® provides a visual aid that monitors heart rate and workout intensity at a glance.

***Important:*** *Please review the following sections in this guide with your users before allowing them to use the fitness equipment:*

- *Important Safety Instructions*
- *Getting Started*
- *Using the Safety Clip (for treadmill only)*

## Using the Touch Heart Rate Feature

**Note:** Touch heart rate performance may vary based on a user's physiology, fitness level, age, and other factors. You may experience an erratic readout if your hands are dry, dirty, or oily, or if the skin on your palms is especially thick. Wearing hand lotion can also cause an erratic readout. In addition, make sure that the sensors are clean to ensure proper contact can be maintained.

To use the touch heart rate feature, place the palm of your hands directly on the metal heart rate sensors on the equipment's handlebars. To ensure a more accurate heart rate readout, make sure you follow these tips:

- Both hands must grip the sensors for your heart rate to register.
- It takes a number of consecutive heart beats (15-20 seconds) for your heart rate to register.
- When gripping the sensors, do not grip tightly. Keep a loose, cupping hold. Holding the grips tightly can affect the reading.
- As you work out, your perspiration will help transmit your heart rate signal. If you have difficulty using the handheld grips to determine your heart rate, try the sensors again later in the workout to see if you can obtain a heart rate signal.
- If the touch heart rate feature does not work for you, Precor recommends that you use a chest transmitter strap.

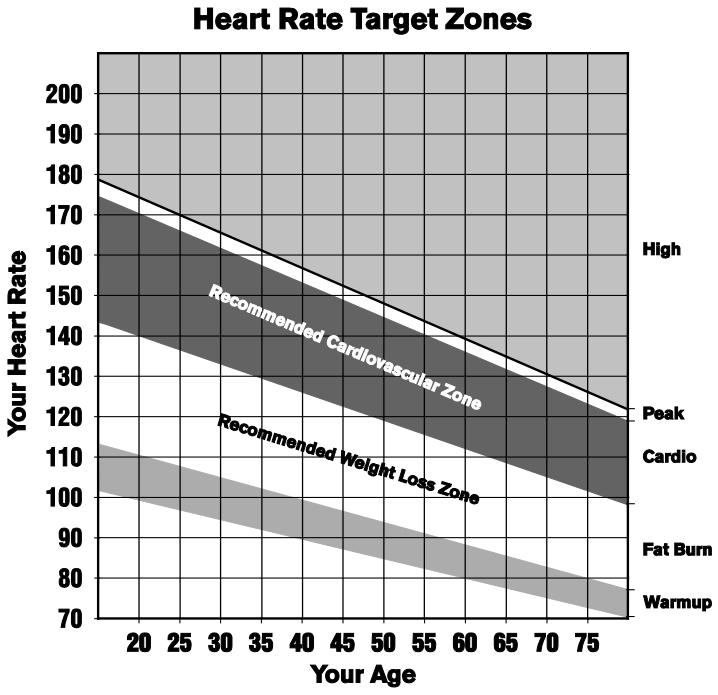


**Figure 5: Heart rate target zones**

**CAUTION: Your heart rate should never exceed 85% of your maximum aerobic heart rate. Your maximum heart rate is equal to 220 minus your age.**

# Using a Chest Strap Transmitter

**WARNING** **Signals used by the Chest Strap Transmitter (or heart rate strap) may interfere with pacemakers or other implanted devices. Consult your physician and the manufacturers of your Chest Strap Transmitter and implanted device before using a Chest Strap Transmitter.**

Wearing a chest strap transmitter during your workout provides steady heart rate information. For the equipment to detect your heart rate, you must grip the touch heart rate sensors or wear a chest strap transmitter while exercising. In the presence of both touch and wireless data, the touch data takes precedence and will display.

**Note:** To receive an accurate reading, the strap needs to be in direct contact with the skin on the lower sternum (just below the bust line for women).

**To use a chest strap transmitter:**

1. Carefully dampen the back of the strap with tap water.

   ***Important:*** *Do not use deionized water. It does not have the proper minerals and salts to conduct electrical impulses.*
2. Adjust the strap and fasten it around your chest. The strap should feel snug, not restrictive.
3. Make sure that the chest strap is right-side-up, lies horizontally across, and is centered in the middle of your chest.
4. Test the chest strap placement by checking the heart rate function on the equipment. If a heart rate is registering, your chest strap placement is correct. If the equipment does not register a heart rate, readjust the strap and recheck the heart rate function.

# Using the Treadmill Safety Clip

The treadmill is equipped with two different stop functions, which behave as follows:

| *If the user ...* | *Then the treadmill belt ...* | *And the console ...* |
|---|---|---|
| Presses down on the red STOP button ❷ | Slows to a stop | Shows that the exercise workout is paused |
| Pulls on the lanyard attached to the safety clip and trips the restart switch ❶ | Slows to a stop | Shows the words PUSH TO RESET SWITCH and an arrow pointing to the Restart switch |

The restart switch is located just below the console and immediately behind the red **STOP** button, as shown in the following illustration. When it is tripped, the bar pops up, displaying the words **PUSH TO RESET SWITCH** on its front side. The treadmill does not operate while these words are visible.

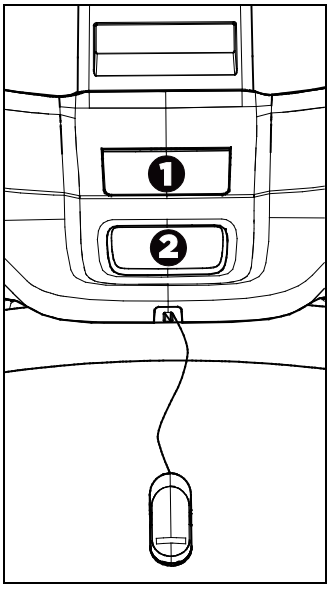


**Figure 6: Restart switch**

Instruct users on how important it is to use the safety clip while exercising on the treadmill, and demonstrate how they should attach it to their clothing near the waistline.

**If the restart switch trips during exercise, perform the following steps:**

1. Reattach the safety clip if necessary.
2. Press the restart switch down until it clicks, returning it to its normal position.

   **Note:** If the restart switch trips, all information about the current workout is deleted.
3. Start the workout from the beginning, reducing the time as needed to account for the amount of exercise that has been completed.

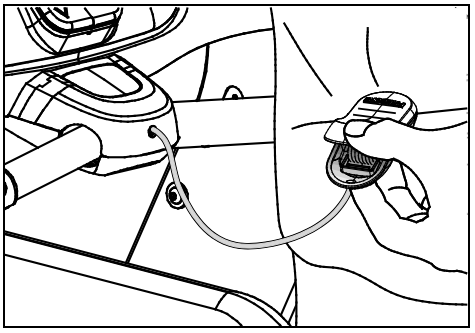

**Figure 7: Attaching the safety clip**

# Treadmill Auto Stop™ (Automatic Stop) Function

***Important:*** *The default setting for this feature is ON. An administrator can turn off this feature in the System Settings; however, Precor recommends it remain ON.*

The Auto Stop™ (Automatic Stop) feature is designed to bring the treadmill to a gradual stop when it is not in use. This might occur if a user steps off the treadmill before the end of a workout and leaves the treadmill running.

Sixty seconds after a treadmill workout starts or resumes, the equipment begins Auto Stop monitoring. If a user is detected, then no message appears, and the selected workout continues.

If no user is detected after an additional 30 seconds, the console displays the message **NO USER DETECTED, STOPPING IN 10 SECONDS** as notification of the pending stop. During the display of this message, a ten second countdown begins. If a user does not override the countdown, the belt comes to a gradual stop after the countdown is complete.

**Note:** Users weighing more than 90 pounds (41 kg) are detected within the speed and position limits of the feature. Users weighing 50 pounds (22.7 kg) to 89 pounds (40.5 kg) may not be detected depending on their speed and location. Always be aware of and follow the console's instructions for proper operation.

## Using SmartRate®

The Precor SmartRate® technology is a precise, easy-to-read heart rate monitor that helps users achieve their best personalized workouts. SmartRate displays actual heart rate information in relation to the user's target zone for weight loss and cardiovascular training. This feature is visible during all workouts. In addition, some equipment includes a Heart Rate Control (HRC) workout that automatically adjusts intensity to keep a user's heart rate in its target zone. For more information, refer to *Programs.*

**CAUTION: Before beginning any fitness program, see your physician for a thorough physical examination. Seek advice from your physician to learn the target heart rate appropriate for your fitness level.**

**To test your heart rate:**

1. Begin a workout by pressing **QUICK START**, or by selecting a preset workout followed by pressing **GO**.
2. Grasp the handheld heart rate sensors with both hands. Depending on the type of equipment, the letters "**Hr"** appear, or a blinking heart displays while the equipment reads your heart rate. After a few moments, your heart rate displays in beats per minute. The blinking segments in the SmartRate field indicate the current zone of your heart rate: Warm Up, Fat Burn, Cardio, or High.

Chapter 4

# Starting a Workout

**CAUTION: If you are using a treadmill, be sure to attach the security clip to your clothing before starting your workout.**

The equipment is in the Welcome state when the words **PRESS GO OR PROGRAMS TO START** scroll across the scrolling text display area and the word **WELCOME** scrolls on the upper text display. Press **Reset** (**Pause/Reset** on tread consoles) to display the Welcome screen.

From the Welcome screen, there are two ways to begin a workout:

- Press **GO** (Quick Start™ method).

  This action launches the Manual program. Calculations, such as calories used, are based on a 150-lb (68 kg), 35-year old individual. You can complete a workout using this program with default values, or you can change workout settings.
- Press **Programs** and enter your personal data.

***Important*:** *On self-powered equipment, the battery initializes when you begin moving. A minimum rate of motion must be maintained for the Welcome screen to appear. The words* ***PEDAL FASTER*** *(or the equivalent message depending on the equipment type) appear in the display when the rate of motion drops below the minimum requirements.*

# Starting a Preset Programmed Workout

Preset workouts are a great way to tailor your workouts to your fitness goals, stay challenged, and add variety to your sessions. The P20 includes the following preset programs:

- Manual
- Interval 1-1
- Interval 1-2
- Weight Loss
- Basic Heart Rate Control
- Hill Climb
- Cross Country
- Random
- Aerobic

**To begin using a program:**

1. On the Welcome screen, press **Programs**.
2. Press **Programs** or **Input Up/Input Down** repeatedly to move through the program list.
3. To begin your workout immediately, press **Go** when the name of the program you want appears in the text display area. To add personal data such as age or weight, press **Enter**.

   Before an exercise session begins, a three-second countdown appears in the upper text display.

## Entering Personal Data

Personal data settings include your age, weight, and how long you want to work out.

The equipment calculates calories burned and SmartRate targets based on your age and weight.

**Note:** The interface may be slightly different based on the type of equipment.

**To enter personal data:**

1. On the Welcome screen, press **Programs**, then **Enter**.
2. Press the **Input** keys to change the default value.
3. Press **Enter**. The weight input screen displays. Press the **Input** keys to change the default value.
4. Press **Enter**. The age input screen displays. Press the **Input** keys to change the default value.
5. Press **GO** or **Enter** to begin your workout.

   The equipment counts down and **1, 2, 3** display on the screen. The words **STARTING WORKOUT** scroll in the lower text display.

### Terminating Data Entry

There are several ways to terminate data entry depending on the type of equipment.

**TIMEOUT:** If a key is not pressed for more than 30 seconds, you are returned to the Welcome screen.

**RESET:** If **Reset** is pressed before beginning the workout, you are returned to the Welcome screen. During a workout, press **Reset** once to see the Summary screen and twice to return to the Welcome screen. On the treadmill, press **Pause/Reset** once to pause the workout, twice to see the Summary screen, and three times to return to the Welcome screen.

**GO:** Press **GO** to begin a selected exercise program. Data entry is bypassed and default values are used.

**ENTER:** Normally, **Enter** is pressed then the displayed value is accepted. If there is more data to enter, then the user is prompted for that data. If there is no more data to enter, the selected program is started using the previously entered data for workout Duration, Weight, and Age.

## Pausing and Restarting an Exercise Session

When you interrupt a workout, the equipment responds in one of two ways, depending on how it is powered.

### Paused (Externally Powered Equipment)

When you interrupt your workout, the words **WORKOUT PAUSED - PRESS GO TO CONTINUE** scroll across the text display. The accumulated metrics (Time, Calories, Distance, and Average Speed) hold their current values and do not change.

To restart the program, press **GO**.

If the equipment remains inactive for more than the maximum pause time, it displays the Summary screen with your workout metrics. After displaying the summary, it returns to the Welcome screen.

### Pending Shutdown (Self-Powered Equipment)

When you interrupt your workout, the words **WORKOUT PAUSED - PEDAL TO CONTINUE** scroll continuously across the text display. It also displays the number of seconds remaining until the equipment shuts down.

To restart the program during the countdown, begin pedaling.

If the equipment remains inactive for more than the maximum pause time, it displays the Summary screen with your workout metrics.

## Ending a Session

Cooling down is an important aspect of your workout because it helps reduce muscle stiffness and soreness by transporting excess lactic acid out of the working muscles. In addition, a five minute cool down allows your heart rate to return to its normal, resting state.

At the end of your workout, a Summary screen displays your average heart rate during your workout and your accumulated workout metrics.

## Understanding Metrics

Three different types of metrics are captured during a workout.

### Controlled Metrics

Metrics that can be set and changed are:

- Resistance Level (AMT, EFX, bike)
- Speed (treadmill)
- Incline (treadmill)
- Steps/Minute (climber)

### Current Performance Metrics

Metrics that describe the intensity of a workout in real time are:

- Calories/Minute, Calories/Hour
- Heart Rate
- Speed (treadmill, bike)
- Revolutions/Minute (bike)
- Strides/Minute (AMT, EFX)

### Accumulated Metrics

Metrics that describe the overall performance throughout the entire exercise session are:

- Time:
  Count-down Mode
  Count-up Mode
- Calories
- Distance:
  Average Strides/Minute (AMT, EFX)
  Average Speed (treadmill, bike)
  Floors (climber)

Chapter 5

# Programs

Preset workouts are a great way to tailor your workouts to your fitness goals, stay challenged, and add variety to your sessions. In the following figures, the elevated areas show the work expenditure for each preset program.

## Manual

In this program, resistance and speed changes are completely under your control. The profile is initially a flat line. Any increase or decrease made in one program segment will increase or decrease all remaining portions by the same amount.

**Figure 8: Manual**

## Interval 1-1 and Interval 1-2

The Interval programs are primarily for conditioning your cardiovascular system. These programs are designed to raise and lower your heart rate in a repeating fashion for a user-defined period of time by alternating rest and work intervals. Program intensity is adjustable.

**Figure 9: Interval 1-1**

**Figure 10: 1-2 Interval**

## Weight Loss

The program time is fixed at 28 minutes. The program consists of four intervals, each lasting eight minutes. You can change the resistance at any time during the work interval.

**Figure 11: Weight Loss**

## Basic Heart Rate Control

This program computes your target heart rate based on the calculation, 60% of 220 minus your age. The equipment adjusts resistance and/or incline to maintain your target heart rate while you work out.

When a heart rate signal is not received, a heart shape with a question mark appears in the upper text display. Recheck your hand grip on the handheld sensors or the placement of your chest strap.

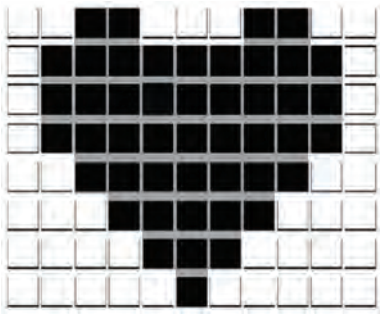

**Figure 12: Basic HRC**

**Note:** For the unit to detect your heart rate, you must grip the handheld heart rate sensors or wear a chest strap while exercising. In the presence of both handheld and wireless data, the handheld data takes precedence and displays.

## Hill Climb

This preset program simulates hill climbing. The program is fixed at 30 minutes on most equipment, and the resistance is predetermined. Any increase or decrease made in one program segment will increase or decrease all remaining portions by the same amount.

**Figure 13: Hill Climb**

## Cross Country

The purpose of the preset program is to simulate an outdoor running experience. In this case, you can change the overall profile or intensity of the program (resistance) at any time; however, you cannot change the shape of the preset "hills" and "valleys" you see depicted on the display.

**Figure 14: Cross Country**

## Random

Every time this program is selected, a different program profile appears. The one-minute segments that appear in the program profile maintain a set resistance that you can override. The Random program has a default time limit, or you can press **STOP** to complete your program sooner.

## Aerobic

This program is similar to an Interval program. You can set a length of time for your fitness session and you can specify the speed and the incline or resistance.

**Figure 15: Aerobic**

Chapter 6

# Maintenance

To keep the equipment functioning properly, perform the minor maintenance tasks in this section at the intervals suggested. Failure to maintain the equipment as described in this section could void the Precor Limited Warranty.

**DANGER** **To reduce the risk of electrical shock, always disconnect the equipment from its power source before cleaning it or performing any maintenance tasks. If the equipment uses an optional power adapter, disconnect the adapter.**

## Cleaning the Console and Display

The console requires little maintenance once installed. Precor recommends that you clean the console before and after each exercise session.

**To remove dust and dirt from the console:**

- Wipe all exposed surfaces with a soft cloth that you have moistened with a solution of 30 parts of water to 1 part of Simple Green® (for more information, visit **www.simplegreen.com**).

***Important:*** *Do not use any acidic cleaners. Doing so will weaken the paint or powder coatings and void the Precor Limited Warranty. Never pour water or spray liquids directly on the console or console's screen.*

- *It is important to avoid using any corrosive chemicals on the console or screen.*
- *Always dampen the cloth and then clean the screen. Be sure to spray the cleaning liquid onto the cloth, not the console, so that drips do not seep into the console.*
- *Apply the cleaner with a soft, lint-free cloth. Avoid using gritty cloths.*

*Notes:*

Precor Incorporated
20031 142nd Avenue NE
P.O. Box 7202
Woodinville, WA USA 98072-4002

P20 Console OM 300753-201 rev B, en
28 June 2011

# Assembling and Maintaining Elliptical Fitness Crosstrainers™

EFX® 883 • EFX® 833 • EFX® 823

PRECOR®

# Assembling and Maintaining Elliptical Fitness Crosstrainers™

EFX® 883 • EFX® 833 • EFX® 823

PRECOR®

# Edition Information

ASSEMBLING AND MAINTAINING ELLIPTICAL FITNESS CROSSTRAINERS: EFX 883 / 833 / 823

P/N 300712-341 rev G

Copyright © July 2011 Precor Incorporated. All rights reserved. Specifications subject to change without notice.

## Trademark Note

Precor, AMT, and EFX are registered trademarks and Preva is a trademark of Precor Incorporated. Other names in this document may be the trademarks or registered trademarks of their respective owners.

## Intellectual Property Notice

All rights, title, and interests in and to the software of the Preva Business Suite, the accompanying printed materials, any copies of such software, and all data collected via the Preva Business Suite, are exclusively owned by Precor or its suppliers, as the case may be.

Precor is widely recognized for its innovative, award-winning designs of exercise equipment. Precor aggressively seeks U.S. and foreign patents for both the mechanical construction and the visual aspects of its product design. Any party contemplating the use of Precor product designs is hereby forewarned that Precor considers the unauthorized appropriation of its proprietary rights to be a very serious matter. Precor will vigorously pursue all unauthorized appropriation of its proprietary rights.

Precor Incorporated
20031 142nd Ave NE, P.O. Box 7202
Woodinville, WA 98072-4002
1-800-347-4404

**http://www.precor.com**

# Important Safety Instructions

Read all instructions in the documentation provided with your exercise equipment, including all assembly guides, user guides, and owner's manuals, before installation of this device.

The display apparatus (hereinafter referred to as the *console*) is intended to be shipped with new Precor exercise equipment (hereinafter referred to as the *base unit*). It is not packaged for individual sale.

**WARNING** **To prevent injury, the console must be attached securely to the base unit following all assembly and installation instructions shipped with the base unit. The console is intended to be connected to AC mains power through the furnished power supply ONLY. It should be powered on only when installed as described in the assembly and installation instructions shipped with the base unit. The console is intended for use only with Precor fitness equipment, not as a standalone device.**

## Safety Precautions

Always follow basic safety precautions when using this equipment to reduce the chance of injury, fire, or damage. Other sections in this manual provide more details of safety features. Be sure to read these sections and observe all safety notices. These precautions include the following:

- Read all instructions in this guide before installing and using the equipment and follow any labels on the equipment.
- Make sure all users see a physician for a complete physical examination before they begin any fitness program.
- *Il est conseillé de subir un examen médical complet avant d'entreprendre tout programme d'exercise. Si vous avez des étourdissements ou des faiblesses, arrêtez les exercices immédiatement.*

- Do not allow children, or people unfamiliar with the operation of this equipment, on or near it. Do not leave children unsupervised around the equipment.
- Make sure all users wear proper exercise clothing and shoes for their workouts and avoid loose or dangling clothing. Users should not wear shoes with heels or leather soles, and they should check the soles of their shoes to remove any dirt and embedded stones. They should also tie long hair back.
- Never leave the equipment unattended when it is plugged in. Unplug the equipment from its power source when it is not in use, before cleaning it, and before providing authorized service.

  **Note:** The optional power adapter is considered a power source for self-powered equipment.
- Use the power adapter provided with the equipment. Plug the power adapter into an appropriate, grounded power outlet as marked on the equipment.
- Care should be taken when mounting or dismounting the equipment.
- Read, understand, and test the emergency stop procedures before use.
- Keep the power cord or optional power adapter and plug away from heated surfaces.
- Route power cables so that they are not walked on, pinched, or damaged by items placed upon or against them, including the equipment itself.
- Ensure the equipment has adequate ventilation. Do not place anything on top of or over the equipment. Do not use on a cushioned surface that could block the ventilation opening.
- Assemble and operate the equipment on a solid, level surface.

- Proper Location for Equipment
    - For all equipment other than treadmills: Locate at least 40 inches (1 meter) away from walls or furniture on either side of the equipment, and 40 inches (1 meter) away from objects behind the equipment.
    - For treadmills: Locate at least 40 inches (1 meter) away from walls or furniture on either side of the treadmill, and at least 80 inches (2 meters) away from objects behind the treadmill.

  ***Important:*** *These location standards should also be used when positioning equipment away from sources of heat, such as radiators, heat registers, and stoves. Avoid temperature extremes.*
- Keep equipment away from water and moisture. Avoid dropping anything on or spilling anything inside the equipment to prevent electric shock or damage to the electronics.
- When using the treadmill, always attach the safety clip to your clothing before beginning your workout. Failure to use the safety clip may pose a greater risk of injury in the event of a fall.
- Do not operate electrically powered equipment in damp or wet locations.
- Never operate this equipment if it has a damaged cord or plug, if it is not working properly, or if it has been dropped, damaged, or exposed to water. Call for service immediately if any of these conditions exist.
- Maintain the equipment to keep it in good working condition, as described in the *Maintenance* section of the assembly and maintenance guide. Inspect the equipment for incorrect, worn, or loose components, and then correct, replace or tighten prior to use.
- If you plan to move the equipment, obtain help and use proper lifting techniques.
- Equipment Weight Restrictions: Do not use the treadmill if you weigh more than 500 pounds (225 kg). If you weigh more than 350 pounds (160 kg), do not run on the treadmill. For all other fitness equipment, the weight limit is 350 pounds (160 kg).
- Use the equipment only for its intended purpose as described in this manual. Do not use accessory attachments that are not recommended by Precor. Such attachments may cause injuries.

- Do not operate the equipment where aerosol (spray) products are being used or where oxygen is being administered.
- Do not use outdoors.
- Do not attempt to service the equipment yourself, except to follow the maintenance instructions in this manual.
- Never drop or insert objects into any opening. Keep hands away from moving parts.
- Do not set anything on the stationary handrails, handlebars, control console, or covers. Place liquids, magazines, and books in the appropriate receptacles.
- Do not lean on or pull on the console at any time.

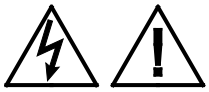

**CAUTION: DO NOT remove the cover, or you may risk injury due to electric shock. Read the assembly and maintenance guide before operating. There are no user-serviceable parts inside. Contact Customer Support if the equipment needs servicing. For use with single phase AC power only.**

## Educating Users

Take time to educate users about the Important Safety Instructions found in both the *User Reference Manual* and *Product Owner's Manual*. Explain to your club or facility patrons that they should observe the following precautions:

- Hold onto a stationary handrail or handlebar while assuming the starting position on the equipment.
- Face the console at all times.
- Hold on to a stationary handrail or handlebar with one hand whenever you operate the console keys with the other hand.

## Hazardous Materials and Proper Disposal

The batteries within self-powered equipment contain materials that are considered hazardous to the environment. Federal law requires proper disposal of these batteries.

If you plan to dispose of your equipment, contact Precor Commercial Products Customer Support for information regarding battery removal. Refer to *Obtaining Service*.

# Product Recycling and Disposal

This equipment must be recycled or discarded according to applicable local and national regulations.

Product labels, in accordance with European Directive 2002/96/EC concerning waste electrical and electronic equipment (WEEE), determine the framework for the return and recycling of used equipment as applicable throughout the European Union. The WEEE label indicates that the product is not to be thrown away, but rather reclaimed upon end of life per this Directive.

In accordance with the European WEEE Directive, electrical and electronic equipment (EEE) is to be collected separately and to be reused, recycled, or recovered at end of life. Users of EEE with the WEEE label per Annex IV of the WEEE Directive must not dispose of end of life EEE as unsorted municipal waste, but use the collection framework available to customers for the return, recycling, and recovery of WEEE. Customer participation is important to minimize any potential effects of EEE on the environment and human health due to the potential presence of hazardous substances in EEE. For proper collection and treatment, refer to *Obtaining Service*.

# Regulatory Notices for the RFID Module

When equipped with a control console as described in this document, this equipment may include a radio-frequency identification (RFID) module. The RFID module has been certified to operate at temperatures between -20°C and 85°C (-4°F and 185°F).

## Radio Frequency Interference (RFI)

The RFID module conforms to the following national standards defining acceptable limits for radio frequency interference (RFI).

## Federal Communications Commission, Part 15

This equipment has been tested and found to comply with the limits for a Class A digital device, pursuant to Part 15 of the FCC Rules. These limits are designed to provide reasonable protection against harmful interference in a commercial installation. The equipment generates, uses, and can radiate radio frequency energy and, if not installed and used in accordance with the owner's manual instructions, can cause harmful interference to radio communications.

Operation is subject to the following two conditions: (1) this device may not cause harmful interference, and (2) this device must accept any interference received, including interference that may cause undesired operation.

**WARNING** **Per FCC rules, changes or modifications not expressly approved by the manufacturer could void the user's authority to operate the equipment.**

## Industry Canada

This device complies with RSS-210:2007 of the Spectrum Management & Telecommunications Radio Standards Specification. Operation is subject to the following two conditions: (1) this device may not cause harmful interference, and (2) this device must accept any interference received, including interference that may cause undesired operation.

This Class A digital apparatus complies with Canadian ICES-003.

*Cet appareil numérique de la classe A est conforme à la norme NMB-003 du Canada.*

**ATTENTION: Haute Tension**
**Débranchez avant de réparer**

### European Applications

CE compliance is claimed to the following directives:

- 1999/5/EC R&TTE Directive
- 2006/95/EC LVD Directive
- 2002/95/EC RoHS Directive

Directive compliance has been verified to the following standards:

- EN 55022
- EN 300 330-1 V1.5.1
- EN 300 330-2 V1.3.1
- EN 301 489-3 V1.4.1
- EN 301 489-1 V1.8.1
- EN 60950-1

## Regulatory Notices for Cardiovascular Exercise Equipment

The regulatory information in this section applies to the exercise equipment and its control console.

### Safety Approvals for Cardiovascular Equipment

Precor equipment has been tested and found to comply with the following applicable safety standards.

#### Cardiovascular Type Equipment:

- CAN/CSA, IEC, EN 60335-1 (Household and similar electrical appliances - Safety)
- EN 957 (Stationary training equipment, class S/B compliant equipment)

#### PVS and P80 Regulatory Notice

This Precor equipment has been tested and found to comply with the following applicable safety standards.

- CAN/CSA, UL, IEC, EN 60065 (Audio, video and similar electronic apparatus - Safety)

## Radio Frequency Interference (RFI)

This Precor exercise equipment conforms to the following national standards defining acceptable limits for radio frequency interference (RFI).

### Federal Communications Commission, Part 15

This equipment has been tested and found to comply with the limits for a Class A digital device, pursuant to Part 15 of the FCC Rules. These limits are designed to provide reasonable protection against harmful interference in a commercial installation. The equipment generates, uses, and can radiate radio frequency energy and, if not installed and used in accordance with the owner's manual instructions, may cause harmful interference to radio communications.

**WARNING** **Per FCC rules, changes or modifications not expressly approved by Precor could void the user's authority to operate the equipment.**

### Industry Canada

This Class A digital apparatus complies with Canadian ICES-003.

*Cet appareil numérique de la classe A est conforme à la norme NMB-003 du Canada.*

**ATTENTION: Haute Tension**
**Débranchez avant de réparer**

### European Applications

CE compliance is claimed to the following directives:

- 2004/108/EC EMC Directive
- 2006/95/EC LVD Directive
- 2002/95/EC RoHS Directive

Directive compliance has been verified to the following standards:

- EN 55022
- EN 55024
- EN 60335-1
- EN 60065 (P80 and PVS)

# Electrical Recommendations: All Equipment Excluding Treadmills

**Note:** This is a recommendation only. NEC (National Electric Code) guidelines or local region electric codes must be followed.

For equipment fitted with a P80 console or Personal Viewing System (PVS) screen a separate power connection is required. For a 20 amp branch circuit up to 10 screens can be connected. If the branch circuit has any other devices plugged into the circuit the number of screens must be reduced by the wattage of the other devices.

**Note:** The typical splitter power cords that have IEC-320 C13 and C14 plugs have a recommended maximum capacity of five screens.

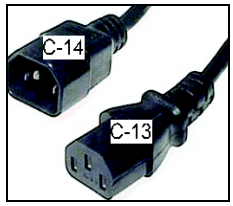


**Figure 1: IEC-320 C13 and C14 plugs**

# Obtaining Service

Do not attempt to service the equipment except for maintenance tasks. If any items are missing, contact your dealer. For more information regarding customer support numbers or a list of Precor authorized service centers, visit the Precor web site at *http://www.precor.com.*

For the most current manuals, go to *http://www.precor.com*.

# Obtaining Updated Documentation

Current documentation for Experience Series consoles and Preva Networked Fitness software is available at **http://www.precor.com/productmanuals**. You may want to check in for updated information from time to time as the universe of Preva features expands.

# Table of Contents

**Important Safety Instructions ..... 3**
Safety Precautions ..... 3
Educating Users ..... 6
Hazardous Materials and Proper Disposal ..... 6
Product Recycling and Disposal ..... 7
Regulatory Notices for the RFID Module ..... 7
Regulatory Notices for Cardiovascular Exercise Equipment ..... 9
Electrical Recommendations: All Equipment Excluding Treadmills ..... 11
Obtaining Service ..... 11
Obtaining Updated Documentation ..... 12

**Assembling the EFX ..... 15**
Installation Requirements ..... 16
Performing the Assembly ..... 19
Leveling the EFX ..... 31
Breaking in the Equipment ..... 32

**Installing the Console ..... 33**
Threading the Cable Assembly (P80) ..... 33
Connecting Cables (P80) ..... 36
Completing the Console Installation (P80) ..... 41
Threading the Cable Assembly (P30 and P20) ..... 42
Connecting Cables (P30) ..... 44
Connecting Cables (P20) ..... 46
Completing the Console Installation (P30 and P20) ..... 47
Verifying That the Heart Rate Display Is Operational ..... 48

**Maintenance ..... 49**
Daily Cleaning ..... 49
Daily Inspection ..... 50
Weekly Maintenance ..... 51
Monthly Maintenance ..... 51
Storing the Chest Strap ..... 52
Moving the Equipment ..... 52
Long-Term Storage ..... 52

**Self-Powered Features..... 53**
Informational Displays Prior to Shutdown ..... 54
Symptoms of a Low Battery ..... 54
Using the Optional Power Adapter .....55
The Optional Power Adapter Kit.....55
Replacing the Battery ..... 56

**Commercial Cardiovascular Equipment Limited Warranty..... 57**

Chapter 1

# Assembling the EFX

**WARNING** **You will need the assistance of two other people to assemble this unit. *DO NOT attempt assembly by yourself*.**

***Important:*** *The instructions in the following procedures are described from the perspective of a person standing* ***directly in front of the equipment*** *(that is, on the opposite side of the control console from a person using the equipment). These descriptions may not match the names of certain parts in the parts list, because such parts are named relative to the back of the equipment.*

**To prepare the EFX for assembly:**

- Open the box and assemble the components in the sequence presented in this guide.
- Assemble and operate your equipment on a hard, level surface in the area intended for use.
- Use a hand truck or furniture dolly to move the EFX unit.

  ***Important:*** *Do not grasp the unit by any of its plastic parts to move it. The plastic parts are non-structural covers and are not capable of supporting the weight of the unit.*
- Provide ample space around the unit.
- Assemble the equipment according to the guidelines in this manual to ensure that you do not void the Precor Limited Warranty.

  ***Important:*** *Any damage caused during installation is not covered by the Precor Limited Warranty.*

- Begin installation of all fasteners by hand, then partially tighten them. Do not fully tighten fasteners until instructed to do so.

  ***Important:*** *When wrench-tightening the screws, make sure the head of the fastener is parallel to the product surface. If it is not, stop tightening to avoid cross-threading. To avoid further damage, stop assembly work and contact Customer Support.*

# Installation Requirements

Prior to assembly, make sure you have the required tools and hardware.

## Hardware Kit (not to scale)

The hardware kit shipped with this equipment contains the fasteners and other hardware components shown in the following table. Before you begin assembly, make sure that your hardware kit is complete. If not, please contact Precor Customer Support.

| Fasteners | | Quantity |
|---|---|---|
| 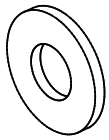 | Flat washers (5⁄16-inch) | 14 |
| 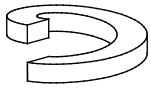 | Split washers (5⁄16-inch) | 14 |
| 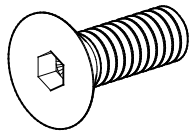 | Flat head hex drive screws (1⁄4-inch x 3⁄4-inch) | 4 |
| 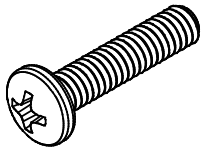 | Phillips-head machine screws (#8 x 3⁄4-inch) | 3 |
| 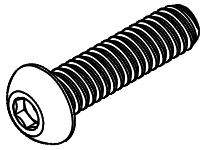 | Buttonhead screws (5⁄16–inch x 1–inch) | 14 |
| 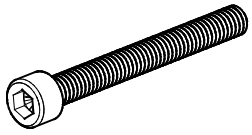 | Sockethead cap screws (#8 x 1½-inch) | 4 |
| 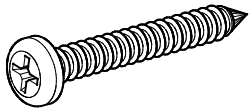 | Self-tapping screws (#8 x 1½-inch) | 4 |

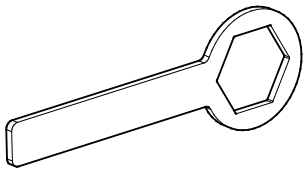

Handlebar bolt wrench 1

Center cross bar cap

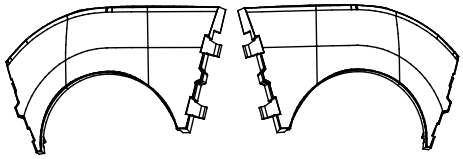

Outer handrail cap (2)

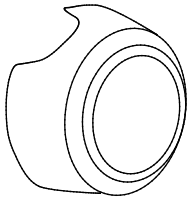

Inner handrail cap (2)

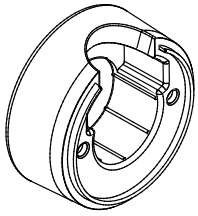

Upright support covers (right-hand and left-hand sets)

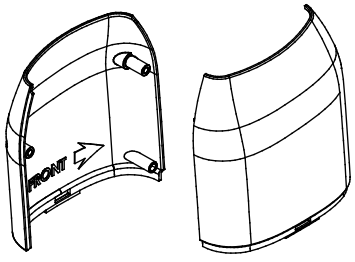

## Required Tools

- #2 Phillips screwdriver
- Rubber mallet
- SAE standard hex wrench set
- SAE standard socket set
- Two 9/16-inch wrenches (open-end and box-end)
- Wire cutter

# Performing the Assembly

**DANGER** **Do not attempt to connect electrical power until all assembly procedures are complete and the console is properly installed.**

As you assemble the EFX, make sure to construct the cable assembly as directed so that the necessary connections are accessible when you add the console.

**To begin assembly:**

1. Remove the lift cover and set it aside.

   ***Important:*** *Grease on the lift screw can stain clothing. Be careful not to get grease on your clothing as you remove the lift cover. Do not remove the grease from the lift screw, because it is required for proper operation.*

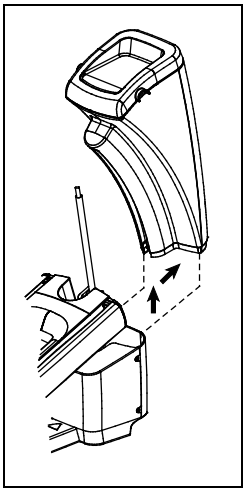

**Figure 2: Lift cover removal**

2. Thread the cable through the left upright support. Tape it to the top of the upright support to secure it temporarily.

   ***Important:*** *Do not stretch, crimp, or damage the cable. Cables damaged by improper installation will not be covered by the Precor Limited Warranty.*

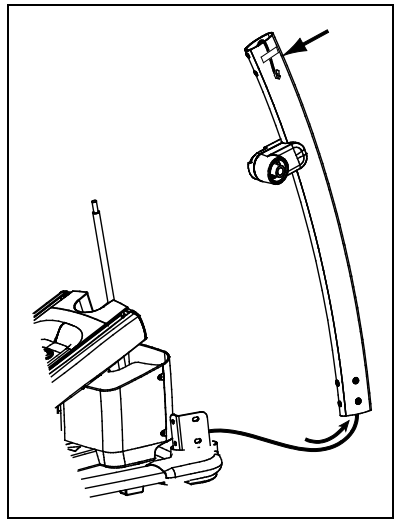

**Figure 3: Route the cable**

3. Attach the left upright support to the base frame using four buttonhead screws, four split washers, and four 5⁄16-inch washers. Partially tighten the fasteners.

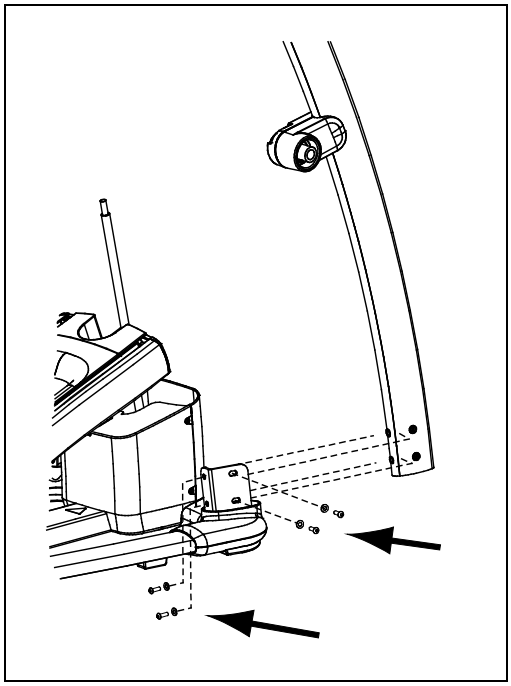

**Figure 4: Attach the upright support to the base frame**

4. Repeat steps 2 through 4 to attach the right upright support.
5. Using a right-angle 3⁄16" hex wrench, remove the four 1⁄4" x 3⁄4" buttonhead screws securing the central plastic base cover.
6. Remove the tape at the top of the left upright support.
7. Feed one of the cables you want to install down through the upright support, then along the inside of the foot support and back through the central frame member. The following illustration shows the general path of the cable.

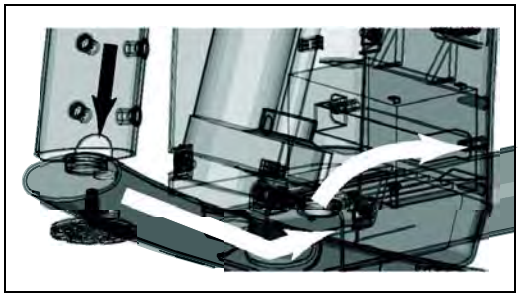

**Figure 5: EFX cable path**

8. Pull the end of the cable upward through the opening just behind the lift motor, as shown in the previous illustration.
9. Attach the cable to the appropriate connector inside the base of the EFX, as shown in the following illustration and table.

   ***Important:*** *Install coaxial cable using a torque wrench and torque to not exceed 8 lb-in. If a torque wrench is not available, install the coaxial cable using a wrench to "snug + ¼ turn." It is permissible to use a wrench on the internal nut to aid the tightening process.*

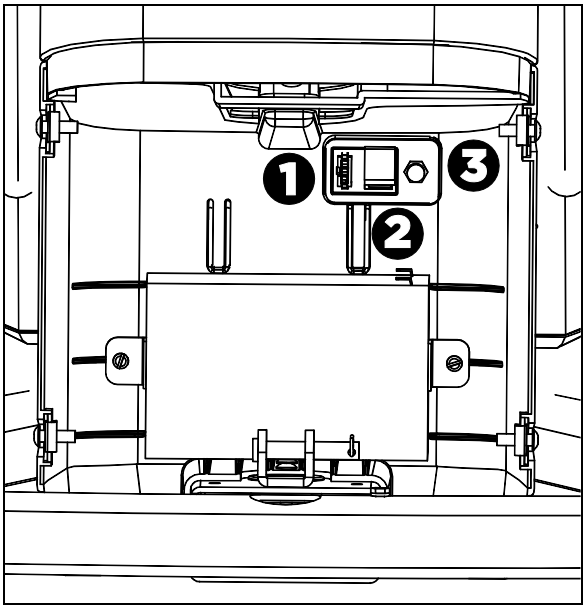


**Figure 6: Cable connection points inside EFX base**

| *Connect ...* | *To ...* |
|---|---|
| The console power cable (red and black, individual leads) | The power connector on the jack panel 1 |
| The television cable (black and round) | The coaxial connector on the jack panel 2 |
| The Ethernet cable (black and flat) | The eight-connector modular jack on the jack panel 3 |

10. Repeat steps 7 through 9 for the remaining cables you want to install.

11. Replace the central plastic base cover, then attach the four buttonhead screws you removed along with the cover. Tighten the screws completely.
12. Replace the lift cover that was removed in the first step.

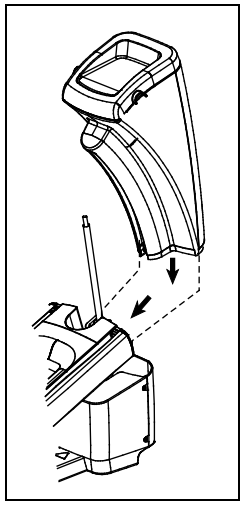

**Figure 7: Lift cover replacement**

### To mount the center column support on the frame:

**Note:** Check that the base fasteners are loose before installing the fasteners for the central column support.

1. Have your assistant support the center column support while you align the inside mounting brackets with the upright supports.
2. Fasten the center column support to each upright support by threading a buttonhead screw, a 5/16-inch washer, and a split washer through opposite mounting holes.

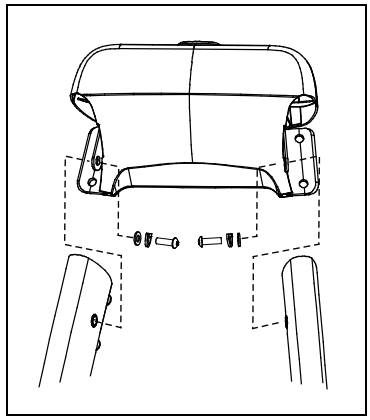

**Figure 8: Rear view of console attachment**

***Important:*** *When wrench-tightening the screws, make sure the head of the fastener is parallel to the product surface. If it is not, stop tightening to avoid cross-threading. To avoid further damage, stop assembly work and contact Customer Support.*

3. Check alignments and thread the remaining four center column support screws, four 5⁄16-inch washers, and four split washers. Tighten with a 3⁄16-inch hex key so the assemblies come together, but leave room for adjustments.

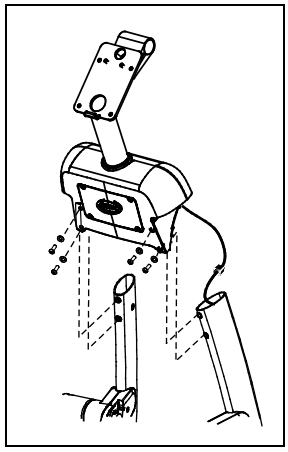

**Figure 9: Attachment of center column support**

### To tighten the fasteners properly:

**CAUTION: Upright support fasteners must be properly aligned and wrench-tightened in the order described below. If improperly assembled, the upright supports can rub against the ramp.**

1. Fully tighten the two sets of fasteners on the back of the center column support.

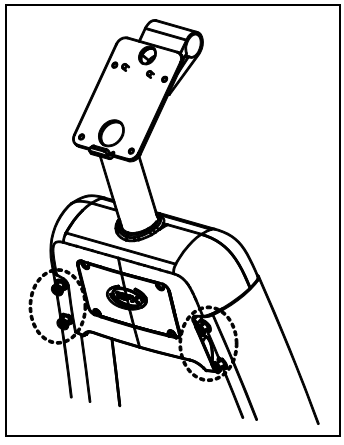

**Figure 10: Fastener attachment detail**

2. Fully tighten the fasteners on the back of each upright support.

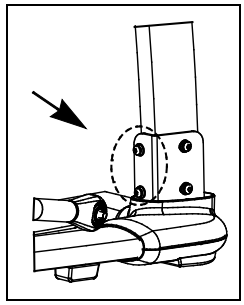

**Figure 11: Tighten the back fasteners on the upright supports**

3. Fully tighten the fasteners on the lower sides of each upright support.

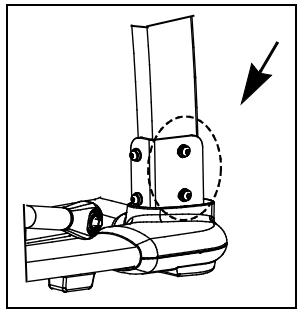

**Figure 12: Tighten the front fasteners on the upright supports**

4. Fully tighten the fasteners on the upper front of the center column support.

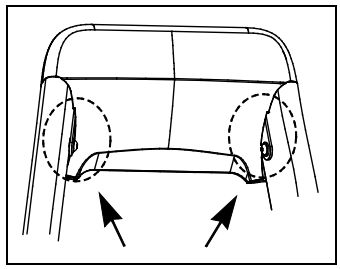

**Figure 13: Tighten the front fasteners on the center column support**

### To attach the handlebars:

***Important:*** *Attach one handlebar at a time.*

1. Use a 3⁄16-inch hex wrench to loosen the two screws in the handlebar clamp. Refer to the following illustration for the location of these fasteners.

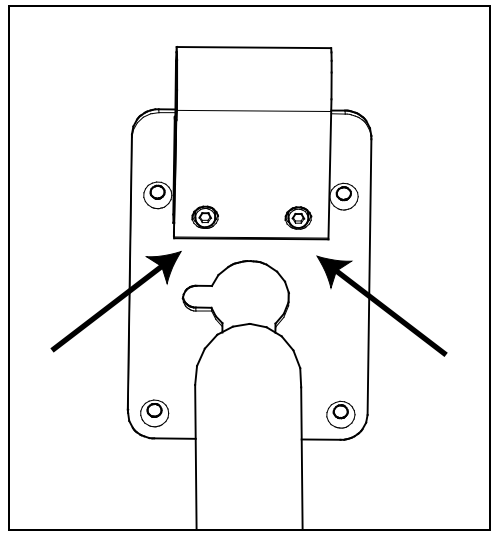

**Figure 14: Clamp screw location, EFX handlebar bracket**

2. Connect the heart rate cable from the console to the heart rate cable from the handlebars and place excess cable inside the handlebar.

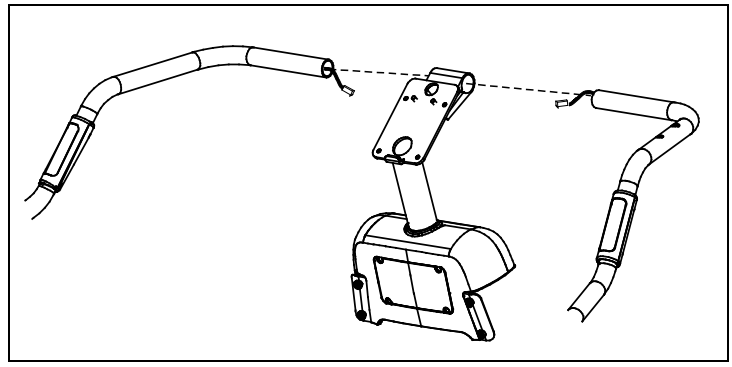

**Figure 15: Threading of the heart rate cable**

***Important:*** *Do not stretch, crimp, or damage the cable. Cables damaged by improper installation will not be covered by the Precor Limited Warranty.*

3. Insert the right handlebar into the handlebar clamp until the foam grip touches the side of the handlebar clamp.
4. Apply pressure to the handlebar and rotate it back and forth to ease it into the handlebar clamp.
5. Slide the inner handlebar cap onto the lower handlebar.
6. Thread one hex head screw through the handlebar and handlebar mount. Partially tighten the screw.

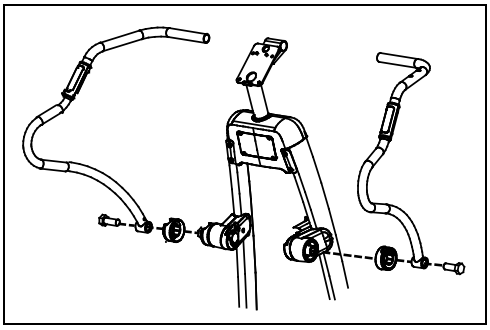

**Figure 16: Handrail attachment detail**

7. Repeat steps 1 through 7 to attach the opposite handlebar.

### To tighten the handlebars completely:

1. Use the wrench included with the unit, or a 1⅜-inch socket, box, or open-end wrench, to tighten the handlebar screws fully.
2. Use a 3⁄16-inch hex wrench to tighten the two handlebar clamp fasteners fully.

3. Insert the center crossbar cap for each handlebar and press firmly into place.

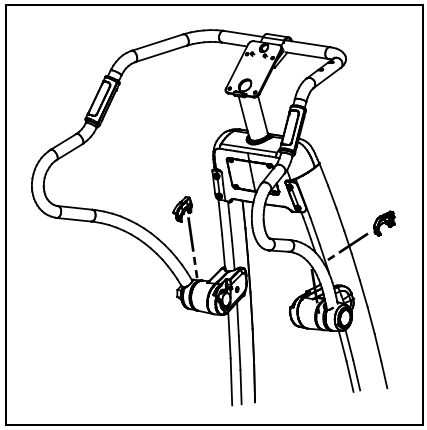

**Figure 17: Center crossbar cap attachment**

**Note:** When secure, the center crossbar caps hold the lift cover in place.

4. Attach the outer handlebar caps.

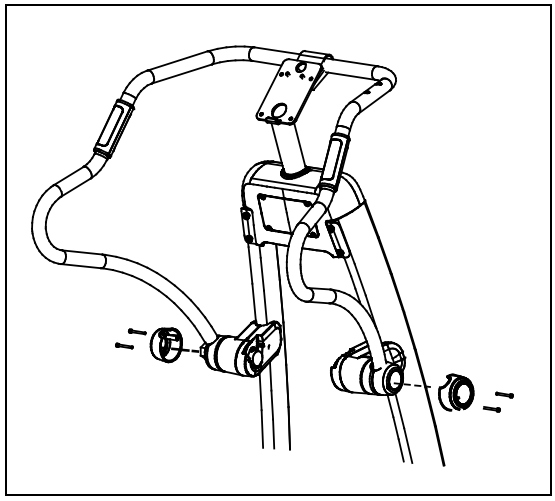

**Figure 18: Outer handrail caps attachment**

### To attach the water bottle holder:

1. Position the water bottle holder as shown and attach it to the right stationary handlebar.

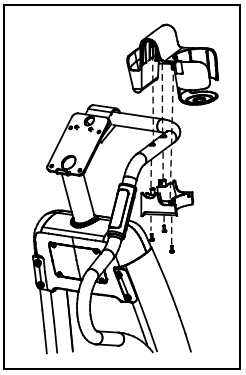

**Figure 19: Water bottle attachment**

2. Secure the holder using three Phillips-head screws.

### To attach the upright support covers:

1. Place one inner and one outer upright support cover around one of the upright supports, aligning them so that the arrows on their inside surfaces point toward the front of the equipment.
2. Line up the protrusions on the outer cover with the screw holes on the inner cover.
3. Apply pressure to both covers so that the protrusions fit firmly into the screw holes.
4. Secure the upright support covers using two self-tapping screws.

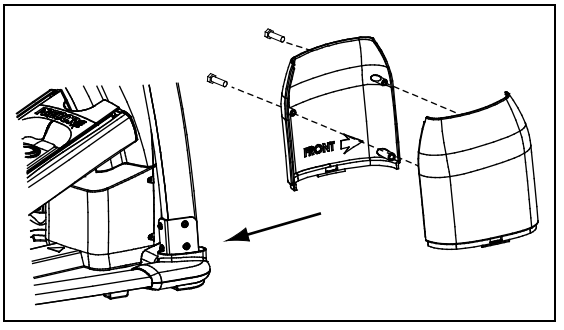


**Figure 20: Upright support cover attachment (right-hand cover shown)**

5. Slide the covers down and snap them into the base mount.

   **Note:** Be sure to align the covers so that the lip of each cover fits inside the edge of the base mount and the hook on the base mount fits into the corresponding slot on the cover. When you have snapped the covers into place, the surfaces of the covers and the base mount should line up smoothly.
6. Repeat steps 1 through 5 to attach the other pair of upright support covers.

# Leveling the EFX

Make sure the unit is level before allowing anyone to use it.

**CAUTION: To eliminate movement, make sure the adjustable feet are in contact with the floor.**

### To level the unit:

1. Gently rock the unit. If there is any movement, ask your assistant to tip the unit to one side while you locate the adjustable feet.
2. Correct the height of each adjustable foot as follows.

| *If you want to ...* | *Then turn the adjustable feet ...* |
|---|---|
| Raise the unit | Counterclockwise |
| Lower the unit | Clockwise |

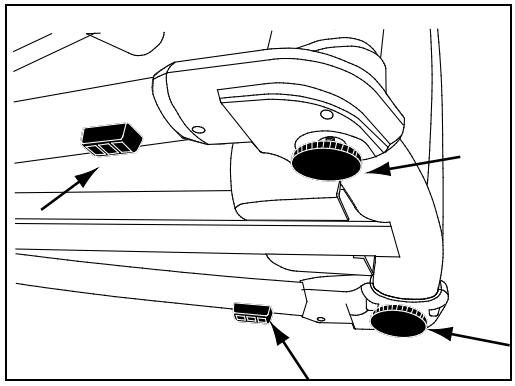

**Figure 21: Rubber pad and adjustable foot locations**

***Important:*** *Place the unit on a flat surface. Rotating the adjustable feet cannot compensate for extremely uneven surfaces.*

When you are finished adjusting the unit, place the unit on the floor and recheck that it is level.

# Breaking in the Equipment

Precor equipment does not require an actual break-in period. However, moving components such as belts, gears, and bearings can settle while the equipment is being stored or shipped. This can cause the equipment to operate with a small amount of roughness or noise when it starts up for the first time.

The equipment usually returns to smooth operation after a day or two of normal use. If it does not, contact your dealer for assistance. For more information, refer to *Obtaining Service*.

Chapter 2

# Installing the Console

To make installation easier, all Precor Experience Series consoles use the same mounting hardware and connector locations whenever possible. The installation sequence for any of them is as follows:

- Threading the cable assembly
- Connecting cables
- Completing the installation (tightening the mounting screws and attaching the back cover)

The following sections describe how to perform these tasks.

## Threading the Cable Assembly (P80)

Earlier in the installation, you threaded the necessary cables through the frame of the base unit and out the passthrough opening in the console mount. As you line up the back plate on the console with the console mount, you must make sure that the cable assembly passes correctly through the openings in both components.

***Important:*** *Before you begin the following procedure, remove the rear cover from the control console. To remove the cover, use your fingernails to pry the lower edge loose, then swing the cover up and out as shown in the following illustration.*

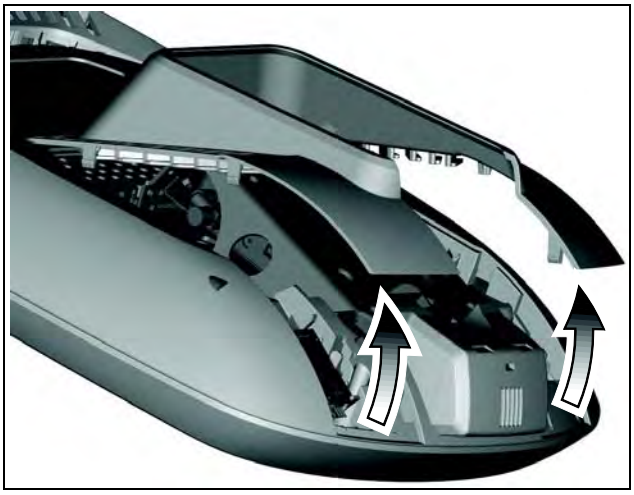

**Figure 22: Removing the access cover from the P80 console**

**To thread the cable assembly:**

1. Make sure that as much of each cable as possible passes through the opening in the middle of the console mount on the base unit.
2. Position the console over the console mount.

3. Rest the console on the console mount so that the notch on the bottom of the console's back plate rests on the rectangular hook at the bottom of the console mount, as shown in the following figure.

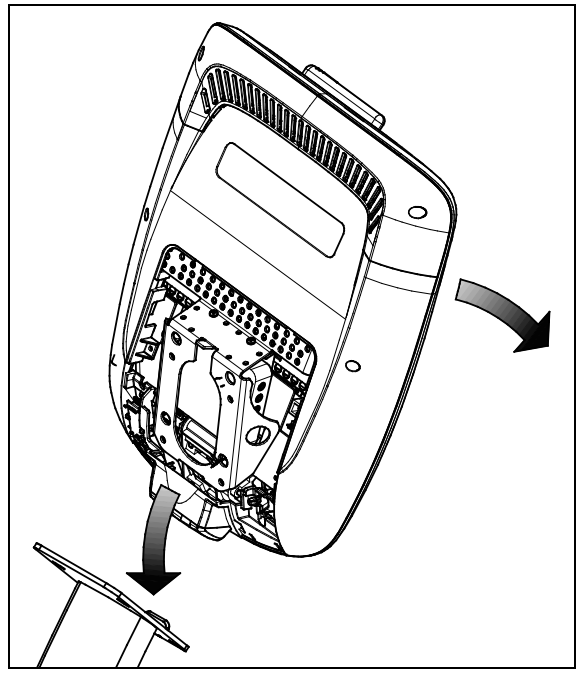

**Figure 23: Console positioning on base unit**

4. Tilt the console forward until it stops. Use one hand to steady the console in this position, or ask your assistant to do so.

# Connecting Cables (P80)

After the console has been seated, separate the individual cables out of the end of the cable assembly and attach them to the appropriate circuit connectors inside the console. Refer to the following diagram and table to identify the cables and connectors.

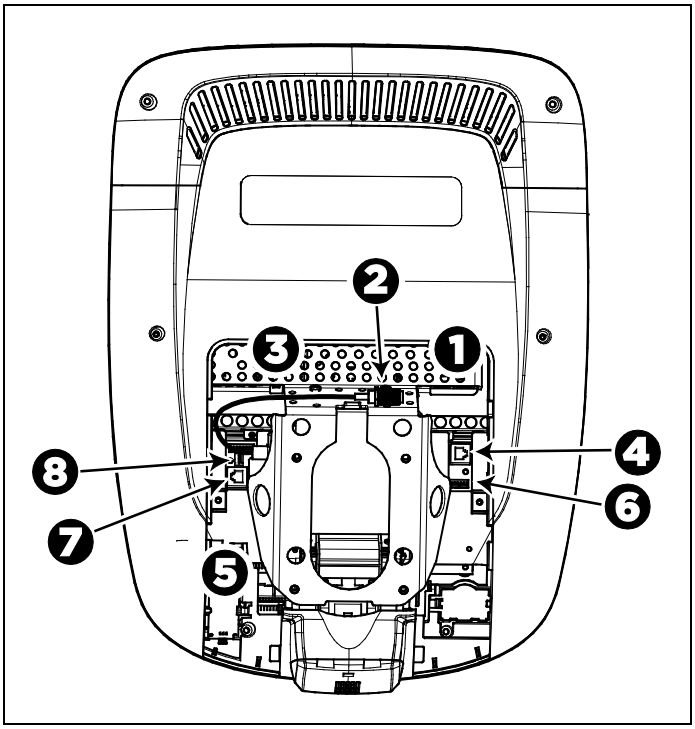


**Figure 24: Cable connections, P80 console**

**Table 1. P80 internal cable connections**

| Cable | Connector Type | Circuit Connector Location |
|---|---|---|
| Ethernet (LAN) | Eight-contact modular, on round black cable | 1 |
| TV in | F-type coaxial | 2 |
| Power with splitter cable | Two-contact plug, polarized and latched | 3 |
| Data from base unit | Eight-contact modular, on flat gray cable | 4 |
| Heart rate sensors | Four-contact strip, keyed | 5 |
| Safety key (treadmills only) | Six-contact strip, keyed | 6 |
| CSAFE | Eight-contact modular, on flat gray cable | 7 |
| Auto Stop sensor (treadmills only) | Four-contact strip, keyed | 8 |

To simplify installation and maintenance, route and connect cables 1 through 5 according to the following instructions.

**Note:** In the illustrations in this section, some cables are omitted for the sake of clarity.

## Connecting the Television Cable

The console's television tuner is mounted inside the console's back plate. The tuner includes a short cable adapter that allows the television cable to be connected outside the back plate.

**To connect the television cable:**

1. Pull the cable out through the lower right corner of the back plate.
2. Route the cable counterclockwise around the outside of the back plate.
3. Attach the connector on the cable to the connector on the tuner cable and tighten the two connectors securely using two 7/16-inch open-end wrenches. Position both connectors above the upper right corner of the back plate.
4. Use a plastic tie to secure the connectors to the top of the back plate. Pass the tie through the two small holes near the upper right corner of the back plate, then wrap it around the connectors and tighten it securely. Cut off and remove the protruding end of the tie.

The following illustration shows how the cable is positioned once it is installed.

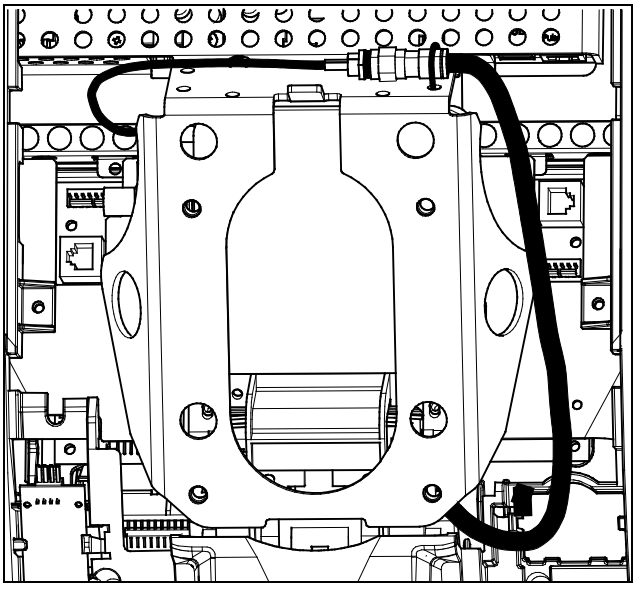

**Figure 25: Connecting the television cable**

## Connecting the Ethernet and Base Unit Data Cables

Both the Ethernet and base unit data cables pass through the cutaway opening at the upper right corner of the back plate and connect to nearby modular jacks in the console. Because of this, it is important to exercise caution when connecting the cables. The black Ethernet cable connects to a jack just underneath the perforated metal bracket at the very top of the opening in the console. The gray base unit data cable connects to a lower jack closer to the back plate.

Refer to the following illustration for the correct position of both cables.

**CAUTION: If you connect the base unit data cable to the wrong jack, the equipment will not function.**

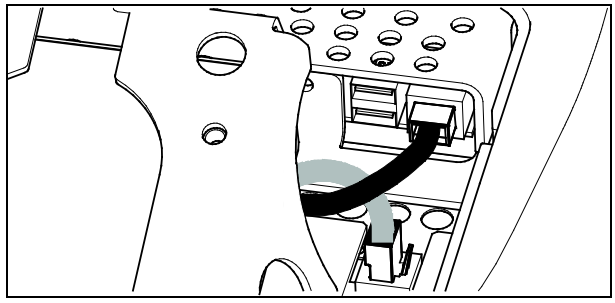

**Figure 26: Connecting the Ethernet and base unit data cables**

## Connecting the Heart Rate Sensor Cable

The heart rate sensor cable passes through the cutaway opening at the upper left corner of the back plate, then down to the small circuit board at the lower left of the console. The following illustration shows how the cable should look once it is installed.

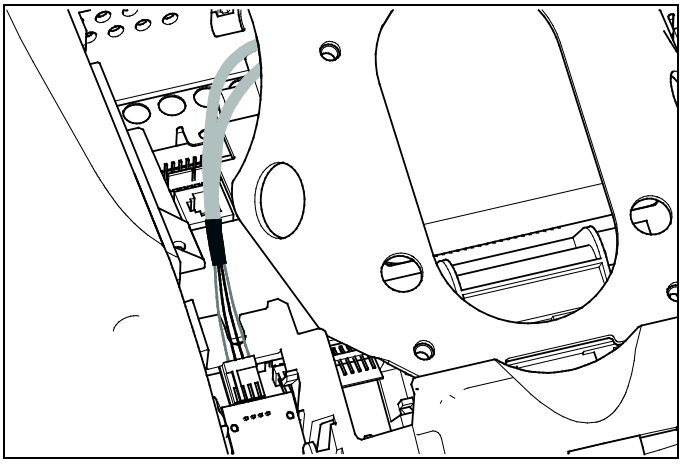

**Figure 27: Connecting the heart rate cable**

## Connecting the Power Cable

A power splitter cable provides power to the tuner and display. To connect the power cable, route it through the cutaway opening at the upper left corner of the back plate and plug it in to this adapter.

The following illustration shows how the cable should look once it is installed.

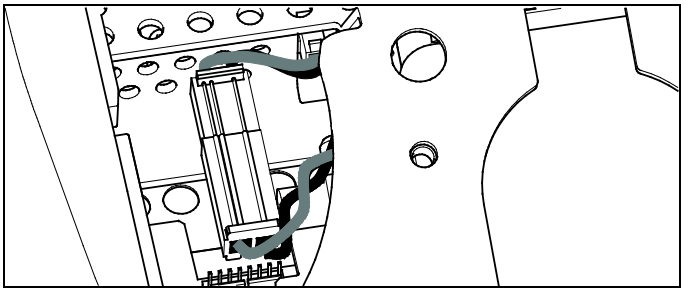

**Figure 28: Connecting the power cable**

# Completing the Console Installation (P80)

***Important:*** *To allow enough room to attach the console's back cover, you must loosen the bracket holding the upper ends of the handlebars in place. If you do not loosen the bracket, the cover may break. Using a 3⁄16-inch hex key, loosen the two socket head cap screws in the bracket by two or three turns each.*

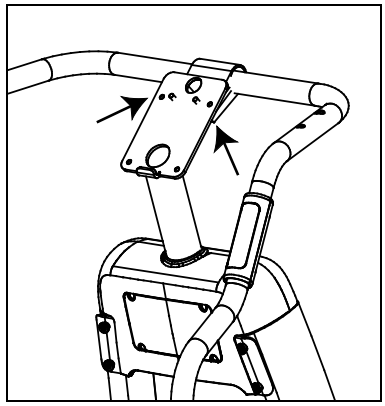

**Figure 29: Location of screws on handlebar bracket**

Before you complete the final installation steps, double-check the connections you have made. Make sure that all cables are fully and securely connected, and that any unneeded cables are tied back properly.

### To complete the installation:

1. Feed extra cable back into the neck tube.
2. Tilt the control console backward (toward yourself) until the tab on the top edge of its back plate slides along the top edge of the console mount and the screw holes align properly.
3. Insert the four 5⁄8-inch flat head screws through the holes in the console mount and thread them into the holes in the back plate on the console. Partially tighten the screws using a 5⁄32-inch hex wrench.
4. Line up the two small tabs at the top of the console's back cover with the slots at the top of the opening in the console case. Insert the tabs into the slots.
5. Insert the remaining tabs on the back cover with the corresponding slots on the console case.
6. Press gently on the edges of the back cover to snap it into place.
7. Using a 3⁄16-inch hex key, fully retighten the two socket head cap screws securing the handlebar bracket.

# Threading the Cable Assembly (P30 and P20)

Earlier in the installation, you threaded the necessary cables through the frame of the base unit and out the passthrough opening in the console mount. As you line up the back plate on the console with the console mount, you must make sure that the cable assembly passes correctly through the openings in both components.

***Important:*** *Before you begin the following procedure, remove the rear cover from the control console. Set the cover and its mounting hardware aside for later use.*

**To thread the cable assembly:**

1. Make sure that as much of each cable as possible passes through the opening in the middle of the console mount on the base unit.
2. Position the console over the console mount.

3. Rest the console on the console mount so that the notch on the bottom of the console's back plate rests on the rectangular hook at the bottom of the console mount, as shown in the following figure.

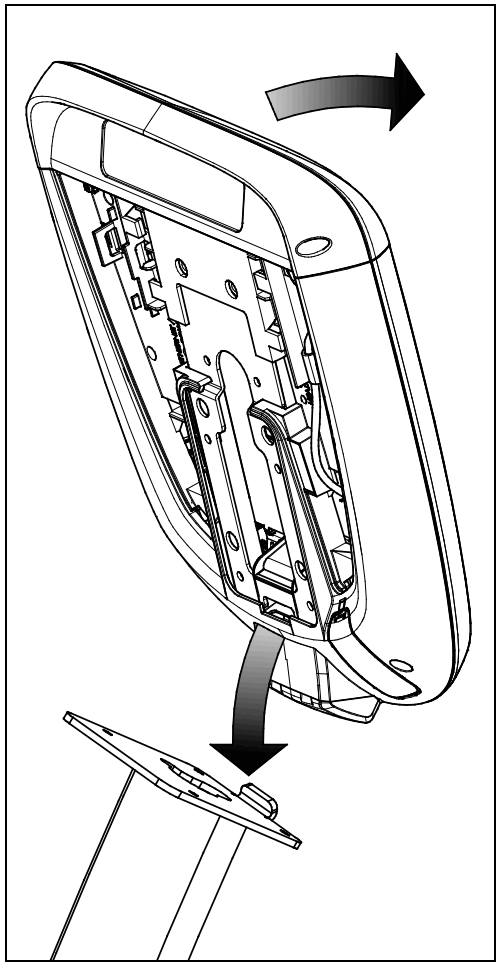

**Figure 30: Console positioning on base unit**

4. Tilt the console forward until it stops. Use one hand to steady the console in this position, or ask your assistant to do so.
5. Pull all cables upward and forward until you can drape them over the top of the console's back plate.

# Connecting Cables (P30)

After the console has been seated, separate the individual cables out of the end of the cable assembly and attach them to the appropriate circuit connectors inside the console. Refer to the following diagram and table to identify the cables and connectors.

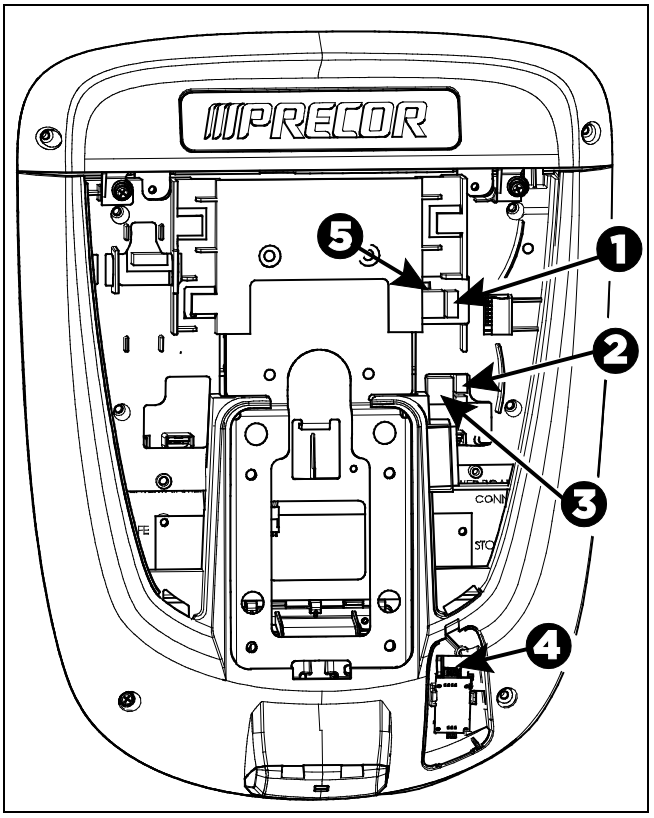


**Figure 31: Cable connections, P30 console**

**Table 2. P30 internal cable connections**

| Cable | Connector Type | Circuit Connector Location |
|---|---|---|
| Safety key (treadmills only) | Six-contact strip, keyed | ❶ |
| Auto Stop sensor (treadmills only) | Four-contact strip, keyed | ❷ |
| Data from base unit | Eight-contact modular, on flat gray cable | ❸ |
| Heart rate sensors | Four-contact strip, keyed | ❹ |
| C-Safe | port | ❺ |

# Connecting Cables (P20)

After the console has been seated, separate the individual cables out of the end of the cable assembly and attach them to the appropriate circuit connectors inside the console. Refer to the following diagram and table to identify the cables and connectors.

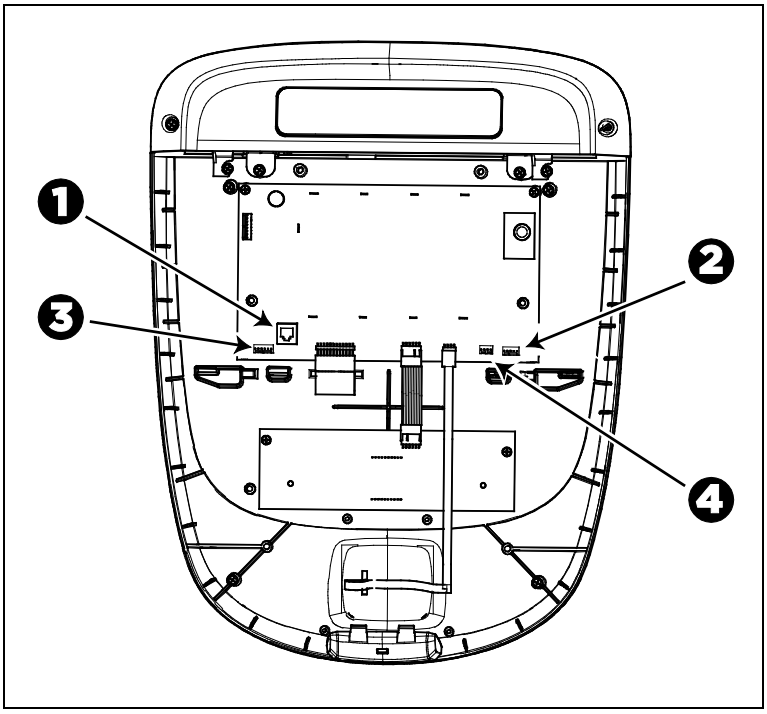


**Figure 32: Cable connections, P20 console**

**Table 3. P20 internal cable connections**

| Cable | Connector Type | Circuit Connector Location |
|---|---|---|
| Data from base unit | Eight-contact modular, on flat gray cable | 1 |
| Heart rate sensors | Four-contact strip, keyed | 2 |
| Safety key (treadmills only) | Six-contact strip, keyed | 3 |
| Auto Stop sensor (treadmills only) | Four-contact strip, keyed | 4 |

# Completing the Console Installation (P30 and P20)

Before you complete the final installation steps, double-check the connections you have made. Make sure that all cables are fully and securely connected, and that any unneeded cables are tied back properly.

**To complete the installation:**

1. Feed extra cable back into the neck tube.
2. Tilt the control console backward (toward yourself) until the tab on the top edge of its back plate slides along the top edge of the console mount and the screw holes align properly.
3. Insert the four ⅝-inch flat head screws through the holes in the console mount and thread them into the holes in the back plate on the console. Partially tighten the screws using a ⅝₂-inch hex wrench.
4. Line up the two small tabs at the bottom of the console's back cover with the slots at the bottom of the console case. Insert the tabs into the slots.
5. Insert the two #8–32 x ½-inch Phillips-head screws that you removed earlier into the holes at the top edge of the console's back cover. Tighten the screws fully.

   ***Important**: Use caution not to pinch the cables between the back cover and PVS mounting screw heads.*
6. Fully tighten the four mounting screws (partially tightened in step 3) using a ⅝₂-inch hex wrench.

# Verifying That the Heart Rate Display Is Operational

**To verify that the heart rate display is operational:**

1. Begin exercising on the equipment.
2. Grasp both touch-sensitive handlebars.

   **Note:** The heart rate is read within ten seconds. During that time, the heart on the display flashes.
3. Look at the HEART RATE display. After a few seconds, a number appears indicating your heart rate.
4. If a number does not appear in the HEART RATE display, check the cable connection to make sure it is properly connected.

Chapter 3

# Maintenance

To keep the equipment functioning properly, perform the minor maintenance tasks in this section at the intervals shown on the maintenance checklist. Failure to maintain the equipment as described in this section could void the Precor Limited Warranty.

**DANGER** **To reduce the risk of electrical shock, always disconnect the equipment from its power source before cleaning it or performing any maintenance tasks. If the equipment is self-powered but also uses the optional power adapter, disconnect the adapter.**

## Daily Cleaning

Precor recommends that you clean the equipment before and after each exercise session. To remove dust and dirt from the equipment, wipe all exposed surfaces with a soft cloth that you have moistened with one of the following cleaners:

- A solution of 30 parts of water to 1 part of Simple Green® (for more information, visit **www.simplegreen.com**)
- ENVIR-O-SAFE oxygen enhanced cleaner or multi-task cleaner concentrate, diluted according to the manufacturer's instructions (for more information, visit **www.daleyinternational.com**)

Alternatively, you can clean the equipment with Athletix fitness equipment cleaning wipes (for more information, visit **www.athletixproducts.com**)

**CAUTION: Read and follow the manufacturer's instructions, particularly dilution instructions, before using any cleaner on Precor fitness equipment. Do not use concentrated cleaners at full strength, or acidic cleaners of any kind; such cleaners weaken the protective finish on the equipment and void the Precor Limited Warranty. Never pour water or spray liquids onto any part of the equipment. Allow the equipment to dry completely before using.**

Vacuum the floor underneath the equipment frequently to prevent the accumulation of dust and dirt that can interfere with its operation. Use a soft nylon scrub brush to clean the grooves on equipment with foot pedals.

## Daily Inspection

At least once every day, examine the equipment for the following problems:

- Slipping belts
- Loose fasteners
- Unusual noises
- Worn or frayed power cords
- Any other indication that the equipment may be in need of service

***Important:*** *If you determine that the equipment needs service, disconnect all power connections (television, Ethernet, and power) and move the equipment away from the exercise area. Place an OUT OF SERVICE sign on the equipment and make it clear to all patrons and other users that they must not use it.*

To order parts or to contact a Precor authorized service provider in your area, refer to *Obtaining Service*.

# Weekly Maintenance

Perform the following maintenance tasks every week:

1. Disconnect the external power supply.
2. Clean the ramps and wheels with water or an approved cleaner.
3. Inspect the power cord to verify that it is not pinched under the equipment or between any two moving parts.
4. Clean the floor under the equipment using a vacuum cleaner or a damp mop.
5. When the floor is completely dry, reconnect the power.
6. Test all console functions, including heart rate monitoring features.
7. Verify that the unit sits squarely on the floor. All of its feet should be touching the floor and the unit should not rock or wobble when in use. If not, re-level it as described in *Leveling the EFX*.

# Monthly Maintenance

**DANGER** **USE EXTREME CAUTION when the rear cover of any EFX is removed. Serious injury could result if fingers are pinched between the flywheel spokes, cranks, movable arms, and the drive weldment. Securing the movable arm to the crank with a clamp is recommended. Be aware of other people within your work area who might cause the arm to move.**

Perform the following maintenance tasks every month:

1. Clean the frame, cover and arms with water or an approved cleaner.
2. Wipe the exterior of the console with a damp sponge or soft cloth, and dry with a clean towel. Keep water away from electronic components to prevent electrical shock or damage.
3. Clean the touchscreen using a soft, lint-free cloth dampened with a 91% isopropyl alcohol solution (either as sold or diluted with an equal amount of water).
4. Remove the rear cover. Vacuum out any debris, being careful not to bring the vacuum cleaner nozzle too close to any circuit board (unless your vacuum cleaner is protected against static buildup).

5. Check the belt tension of the step-up and drive belts.
6. Clean and lubricate the lift motor screw with an approved grease such as SuperLube® with Teflon® or Mobil 1® synthetic grease (adjustable-ramp models only).
7. Check all fasteners for proper tightness and torque.
8. Replace all covers.
9. Verify that the unit sits squarely on the floor. All of its feet should be touching the floor and the unit should not rock or wobble when in use. If not, re-level it as described in *Leveling the EFX*.

## Storing the Chest Strap

If you purchased the optional heart rate chest strap, store it in a place where it remains free of dust and dirt (for example, in a closet or drawer). Be sure to protect the chest strap from extremes in temperature. Do not store it in a place that may be exposed to temperatures below 32° F (0° C).

To clean the chest strap, use a sponge or soft cloth dampened in mild soap and water. Dry the surface thoroughly with a clean towel.

## Moving the Equipment

The equipment is very heavy. If you plan to move it to a new location, obtain the help of an adult assistant and use proper lifting techniques. If the equipment includes roller wheels on one end, use the wheels to reduce the load on yourself and your assistant.

We recommend a four-wheeled dolly to move Elliptical Fitness Crosstrainers.

## Long-Term Storage

If you do not expect anyone to use the equipment for a long time, perform the following tasks to prepare it for storage:

- If it has a power cord, disconnect the cord.
- If it has an optional power adapter, connect the adapter to prevent damage to the internal battery.
- Position it so that it will not become damaged and will not interfere with people or other equipment.

Chapter 4

# Self-Powered Features

***Important*:** *This chapter of the manual describes Precor fitness equipment that can operate without being connected to AC power. This includes units equipped with P30 or P20 consoles. However, P80 consoles must be connected to AC power through their power supplies to operate. For this reason, this chapter does not apply to units equipped with P80 consoles.*

On self-powered equipment, the system initializes and displays the Welcome screen when a user starts exercising. A minimum rate of motion must be maintained for the banner to appear, as shown in the following table. When a person meets the requirements, the power that is generated allows the equipment to function properly.

**Table 4. Minimum requirements for operation**

| Equipment | Rate of Motion |
|---|---|
| AMT | 56 strides per minute (SPM) |
| EFX | 40 strides per minute (SPM) |
| Climber | 30 steps per minute |
| Bike | 20 revolutions per minute (RPM) |

Informational displays appear when the battery is low or when the rate of motion drops below the minimum requirements. The display explains what to do to retain power. If the messages are ignored, the equipment begins shutdown procedures to maintain the charge of the battery. Refer to *Informational Displays Prior to Shutdown*.

An optional power adapter can be purchased and provides sustained power to the equipment. If you plan to change the club settings, the power adapter is highly recommended. To purchase the optional power adapter, check with your dealer. Refer to *Obtaining Service*.

# Informational Displays Prior to Shutdown

The equipment saves its battery charge by moving into a shutdown mode. If the user does not maintain the minimum rate of motion, a 30-second shutdown process begins.

In this mode, the console displays a countdown indicator and ignores all keypresses. If no movement is detected or the rate of motion remains below the minimum, the indicator changes as the countdown continues.

**Note:** The user can resume exercising before the countdown period elapses and the program will continue from the point at which it was paused.

***Important:*** *If the equipment is connected to a CSAFE master device, it follows a slightly different shutdown process. Ten seconds before the equipment shuts down, it ends the exercise session and displays a reset message while it disconnects from the CSAFE master device. It ignores all keypresses during these last ten seconds.*

# Symptoms of a Low Battery

If no one has used the equipment for an extended period of time, the battery may need recharging.

Symptoms of a low battery include the following:

- A flickering or erratic display
- Loss of user and program information after the user stops exercising, without any display of a workout summary or a notification of pending shutdown

***Important:*** *To maintain a constant power source, use the optional power adapter.*

# Using the Optional Power Adapter

After connecting the power adapter to the equipment, plug the opposite end into the appropriate power source (120 V or 240 V).

**CAUTION: When the optional power adapter is in use, make sure that the power supply cord does not create a safety hazard. Keep it out of the way of traffic and moving parts. If the power supply cord or power conversion module is damaged, it must be replaced.**

The control console functions differently when the power adapter is connected. Because the power adapter provides a constant source of power, a user can pause for brief periods without initiating shutdown procedures. When the pause time limit expires and the user has not resumed exercising, the console returns to the Welcome screen. The default pause time is 30 seconds for all fitness equipment. Refer to the manual for your control console for instructions on setting or changing the pause time limit. To learn how to install the power adapter, refer to *The Optional Power Adapter Kit*.

# The Optional Power Adapter Kit

If you purchase the optional power adapter, you must also purchase the internal cable kit. The kit supplies the cable, bracket, and fasteners that connect the power adapter to the lower electronics board.

**CAUTION: The internal cable kit must be installed by authorized service personnel. Do not attempt installation on your own as you could void the Precor Limited Warranty. For more information, refer to *Obtaining Service*.**

***Important*:** *If this equipment includes a P80 console, the optional power adapter and the internal cable kit must still be installed to provide continuous power to the base unit and support its internal battery.*

Once the internal cable kit is installed, you can plug the optional power adapter into the equipment. Plug the opposite end into the appropriate power source for your equipment (120 V or 240 V). Review the safety instructions found at the beginning of this manual before using the power adapter.

# Replacing the Battery

The equipment's battery is built to last for a long time. However, if you feel that the battery may need replacing, check with an authorized service technician. Refer to *Obtaining Service*.

**CAUTION: The battery stored inside the equipment contains hazardous materials and must be disposed of according to Hazardous Waste Regulations. Refer to *Hazardous Materials and Proper Disposal*.**

Chapter 5

# Commercial Cardiovascular Equipment Limited Warranty

PLEASE READ THESE WARRANTY TERMS AND CONDITIONS CAREFULLY BEFORE USING YOUR PRECOR INCORPORATED PRODUCT. BY USING THE EQUIPMENT, YOU ARE CONSENTING TO BE BOUND BY THE FOLLOWING WARRANTY TERMS AND CONDITIONS.

## Limited Warranty.

Precor Incorporated warrants all new Precor products to be free from defects in materials and manufacture for the warranty periods set forth below. The warranty periods commence on the invoice date of the original purchase. This warranty applies only against defects discovered within the warranty period and extends only to the original purchaser of the product. Parts repaired or replaced under the terms of this warranty will be warranted for the remainder of the original warranty period only. To claim under this warranty, the buyer must notify Precor or your authorized Precor dealer within 30 days after the date of discovery of any nonconformity and make the affected product available for inspection by Precor or its service representative. Precor's obligations under this warranty are limited as set forth below.

## Warranty Periods and Coverage.

All Commercial Cardiovascular Products (excluding StretchTrainer, Strength Products, and coverage specific to certain models and options as defined below):

- Frame: 7 years
- Treadmill drive motor: 5 years
- Items subject to wear: 1 year
- All other parts (including mechanical parts and electronic parts): 2 years
- Labor: 1 year

880 Line Commercial Cardiovascular Products (superseding the coverage above where applicable):

- Labor on the P80 console: 2 years
- High wear items on the P80 console, including headphone jack, USB connector, and iPod® connector: 90 days

### Options / Accessories

Many options or accessories have components that are connected internally or mounted inside the electronic console. The following guidelines determine the warranty for these components. If the internal components are installed by the factory or by an authorized dealer as part of the original sale and delivery, they have a warranty that is identical to the warranty of the equipment in which they are connected or mounted. If the internal components are not installed by the factory or by an authorized dealer as part of the original sale and delivery, they have a 90 days parts and labor limited warranty. All components that are not internally connected have a 90 days parts only limited warranty. Satisfactory proof of purchase is required in all cases.

## Conditions and Restrictions.

This warranty is valid only in accordance with the conditions set forth below:

1. The warranty applies to the Precor product only while
   a. it remains in the possession of the original purchaser and proof of purchase is demonstrated.
   b. it has not been subjected to accident, misuse, abuse, improper service, or non-Precor modification.
   c. claims are made within the warranty period.
2. This warranty does not cover damage or equipment failure caused by electrical wiring not in compliance with electrical codes or Precor owner's manual specifications, or failure to provide reasonable and necessary maintenance as outlined in the owner's manual.
3. Precor is not responsible for Internet connectivity to its products. This restriction applies to services, such as those provided by an Internet service provider (ISP), and also to hardware related to Internet connectivity, such as Ethernet cabling, routers, servers and switches.
4. Precor is not responsible for the quality of television, video, audio, or other media supplied to its products. This restriction applies to services, such as those provided by a cable or satellite television provider; to signal strength and clarity; and also to hardware related to the reception and delivery of television, video, audio, and other media. Such hardware can include (but is not limited to) audio, video, and radio-frequency (RF) cabling, connectors, receivers, modulators, combiners, distribution amplifiers, splitters, and so on.
5. Precor cannot guarantee that the heart rate measurement system on its products will work for all users. Heart rate measurement accuracy varies based on a number of factors, including the user's physiology and age, the method in which the heart rate measurement system is used, external interference, and other factors that may influence heart rate acquisition.
6. Except in Canada, Precor does not pay labor outside the United States.
7. Warranties outside the United States and Canada may vary. Please contact your local Dealer for details.

This Limited Warranty shall not apply to:

1. Software version upgrades.
2. Software defects that do not materially and negatively affect the normal performance of the product under normal conditions of use.
3. Consumable goods or cosmetic items of the product, the exterior of which has been damaged or defaced as a result of abuse, misuse, accident, improper service or installation, mishandling, or modification in design or construction not authorized by Precor.
4. Repairs performed on Precor equipment missing a serial number or with a serial tag that has been altered or defaced.
5. Service calls to correct installation of the equipment or instruct owners on how to use the equipment.
6. Pickup and delivery involved with repairs.
7. Any labor costs incurred beyond the applicable labor warranty period.

### Disclaimer and Release.

The warranties provided herein are the exclusive warranties given by Precor and supersede any prior, contrary or additional representations, whether oral or written. ANY IMPLIED WARRANTIES, INCLUDING THE WARRANTY OF MERCHANTABILITY OR FITNESS FOR A PARTICULAR PURPOSE THAT APPLY TO ANY PARTS DESCRIBED ABOVE ARE LIMITED IN DURATION TO THE PERIODS OF EXPRESS WARRANTIES GIVEN ABOVE FOR THOSE SAME PARTS. PRECOR HEREBY DISCLAIMS AND EXCLUDES THOSE WARRANTIES THEREAFTER. Some States do not allow limitations on how long an implied warranty lasts, so the above limitation may not apply to you. PRECOR ALSO HEREBY DISCLAIMS AND EXCLUDES ALL OTHER OBLIGATIONS OR LIABILITIES, EXPRESS OR IMPLIED, ARISING BY LAW OR OTHERWISE, WITH RESPECT TO ANY NONCONFORMANCE OR DEFECT IN ANY PRODUCT, INCLUDING BUT NOT LIMITED TO: (A) ANY OBLIGATION, LIABILITY, RIGHT, CLAIM OR REMEDY IN TORT, WHETHER OR NOT ARISING FROM THE NEGLIGENCE OF PRECOR OR ITS SUPPLIERS (WHETHER ACTIVE, PASSIVE OR IMPUTED); AND (B) ANY OBLIGATION, LIABILITY, RIGHT, CLAIM OR REMEDY FOR LOSS OF OR DAMAGE TO ANY EQUIPMENT. This disclaimer and release shall apply even if the express warranty set forth above fails of its essential purpose.

## Exclusive Remedies.

For any product described above that fails to conform to its warranty, Precor will provide, at their option, one of the following: (1) repair; (2) replacement; or (3) refund of the purchase price. Precor Limited Warranty service may be obtained by contacting the authorized dealer from whom you purchased the item. Precor compensates Servicers for warranty trips within their normal service area to repair commercial equipment at the customer's location. You may be charged a trip charge outside the service area. THESE SHALL BE THE SOLE AND EXCLUSIVE REMEDIES OF THE BUYER FOR ANY BREACH OF WARRANTY.

## EXCLUSION OF CONSEQUENTIAL AND INCIDENTAL DAMAGES.

PRECOR AND/OR ITS SUPPLIERS SHALL HAVE NO OBLIGATION OR LIABILITY, WHETHER ARISING IN CONTRACT (INCLUDING WARRANTY), TORT (INCLUDING ACTIVE, PASSIVE, OR IMPUTED NEGLIGENCE AND STRICT LIABILITY), OR OTHERWISE, FOR DAMAGE TO THE EQUIPMENT, PROPERTY DAMAGE, LOSS OF USE, REVENUE OR PROFIT, COST OF CAPITAL, COST OF SUBSTITUTE EQUIPMENT, ADDITIONAL COSTS INCURRED BY BUYER (BY WAY OF CORRECTION OR OTHERWISE) OR ANY OTHER INCIDENTAL, SPECIAL, INDIRECT, OR CONSEQUENTIAL DAMAGES, WHETHER RESULTING FROM NONDELIVERY OR FROM THE USE, MISUSE OR INABILITY TO USE THE PRODUCT. This exclusion applies even if the above warranty fails of its essential purposes and regardless of whether such damages are sought for breach of warranty, breach of contract, negligence, or strict liability in tort or under any other legal theory. Some states do not allow the exclusion or limitation of incidental or consequential damages, so the above limitation may not apply to you.

This warranty gives you specific legal rights, and you may also have other rights, which vary from state to state.

## Complete this portion and keep for your records.

Purchased From: _____

*Example: Dealer or store name.*

Phone Number: _____

*Example: Dealer or store telephone number.*

Product/model: _____

*Example: AMT 885 or EFX 883.*

Serial number: _____

*The serial number is found on the shipping container.*

Effective 1 November 2010
P/N 36286-114

Precor Incorporated
20031 142nd Avenue NE
P.O. Box 7202
Woodinville, WA USA 98072-4002

EFX 8x3 PAG/OM 300712-341 rev G, en
Warranty #36286-114
11 July 2011